DOLLE®

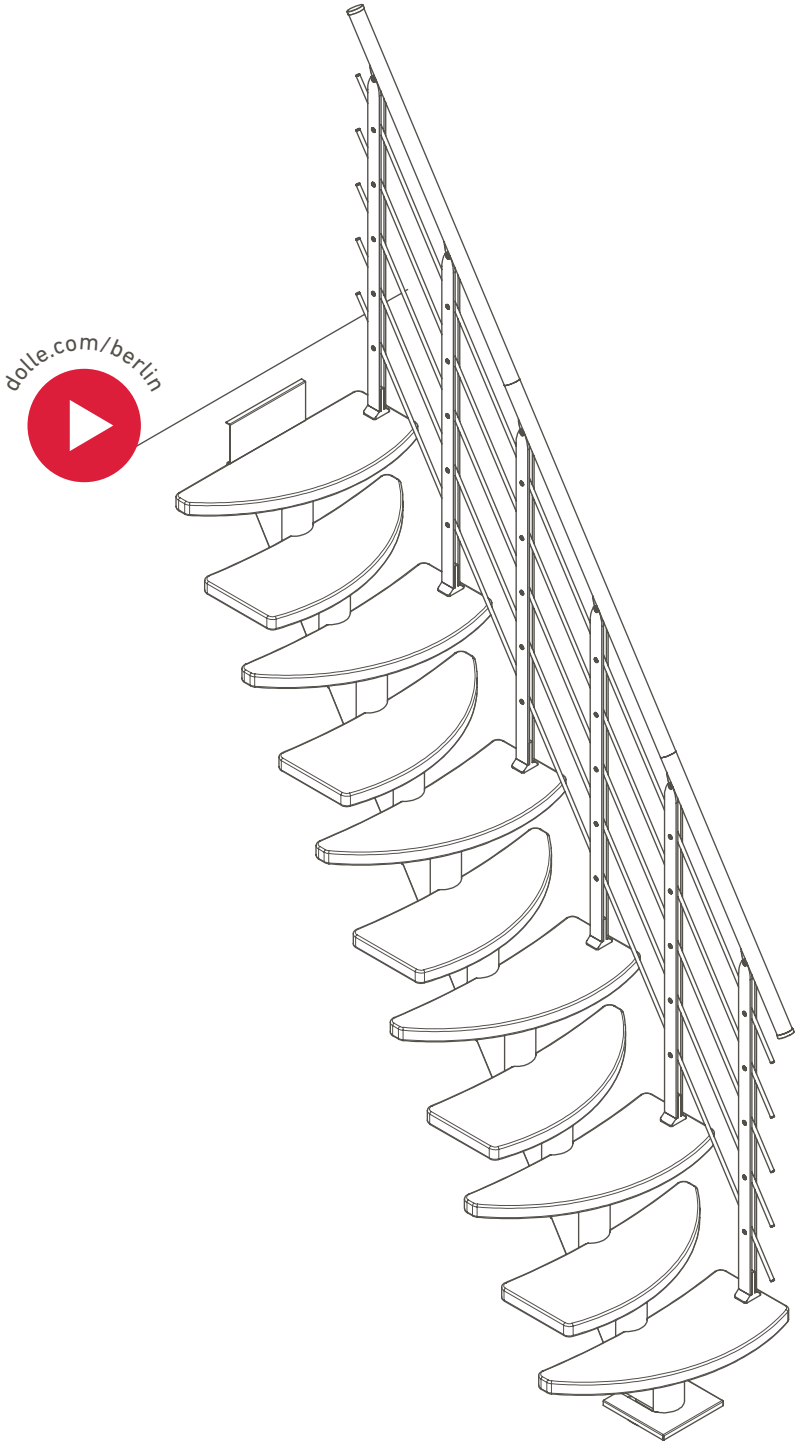

DESIGN BANISTER

BERLIN

INSTRUCTION / MONTAGEANLEITUNG
INSTRUKTION / INSTRUCCIÒN / INSTRUKCJA

SOGEM®
PART OF DOLLE GROUP

© DOLLE A/S | In the interest of technical progress we reserve the right to make changes | R1-96831 | 17/09/21

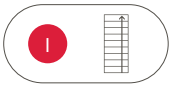

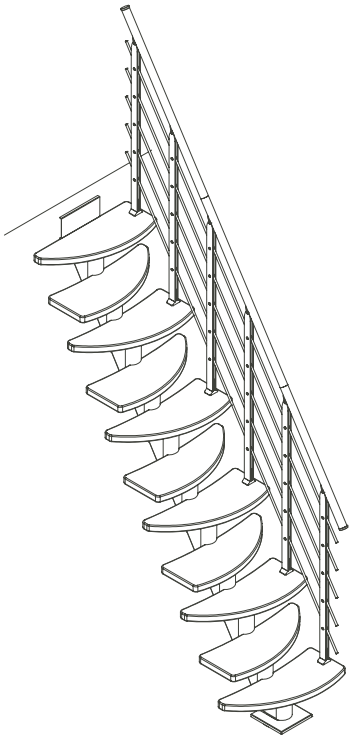

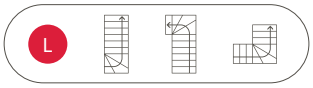

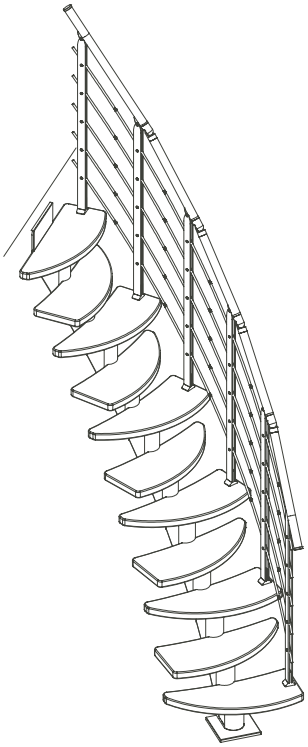

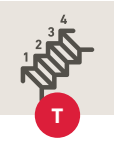

Height floor-to-floor	Rise height	Number of treads
Geschosshöhe	Steigungshöhe	Anzahl Stufen
Hauteur sol-sol	Hauteur de marche	Nombre de marches
Altura de suelo/suelo	Altura de peldaños	Numero de peldaños
Altura do chão / chão	Altura do degrau	Número de etapas (degraus)
Hoogte vloer/vloer	Hoogte trede	Aantal treden
Etagehøjde	Stigningshøjde	Antal trin
Golv till golv höjd	Stigningshöjd	Antal steg
Wysokość kondygnacji od podłogi do podłogi	Wysokość stopnia	Ilość stopni
Înălțime sol-sol	Înălțime treaptă	Număr trepte
Výška patra podlaha-podlaha	Výška schodu	Počet nášlapů
Высота от пола до пола	Шаг ступени	Кол-во ступеней
Aukšto aukštis	Pakopos aukštis	Pakopų kiekis
Stāva augstums	Pakāpiena augstums	Pakāpienu skaits
Korruse kõrgus	Astme kõrgus	Astmete arv
Višina nadstropja	Višina stopnice	Število stopnic
Visina kata	Visina stepenice	Broj stepenica
Výška podlažia	Výška stupňa	Počet stupňov

1

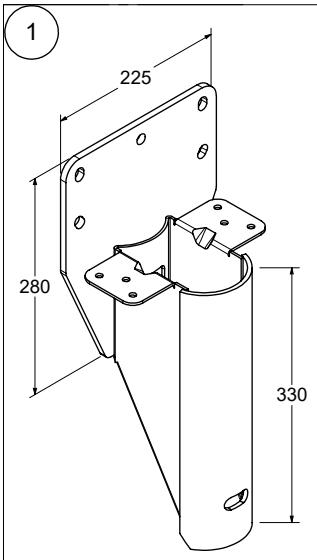

x 1
K2-1077400 *RAL 7016*
K2-1077401 *RAL 9005*
K2-1077402 *Pearl grey*
K2-1077403 *RAL 9016*

2

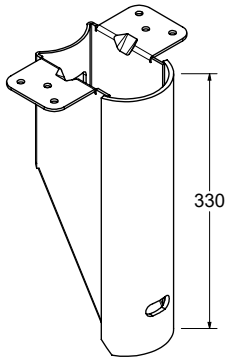

	10	11	12	13
x	8	9	10	11

K2-1077405 *RAL 7016*
K2-1077406 *RAL 9005*
K2-1077407 *Pearl grey*
K2-1077408 *RAL 9016*

3

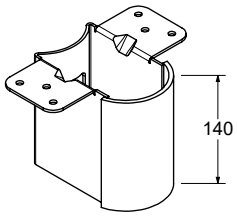

x 1
K2-1077410 *RAL 7016*
K2-1077411 *RAL 9005*
K2-1077412 *Pearl grey*
K2-1077413 *RAL 9016*

4

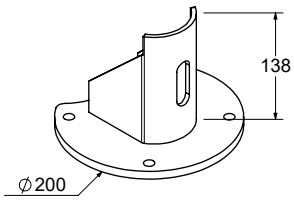

x 1
K2-1077442 *RAL 7016*
K2-1077411 *RAL 9005*
K2-1077412 *Pearl grey*
K2-1077413 *RAL 9016*

5

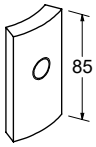

	10	11	12	13
x	9	10	11	12

H2-20505

6

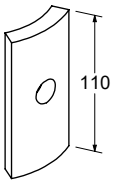

	10	11	12	13
x	9	10	11	12

H2-20506

7

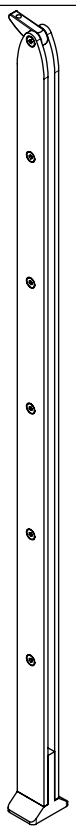

	x
10	5
11	6
12	6
13	7

K2-1077710
RAL 7016
K2-1077711
RAL 9005
K2-1077712
Pearl grey
K2-1077713
RAL 9016

8

	10	11	12	13
x	5	6	6	7

K1-1077203

10

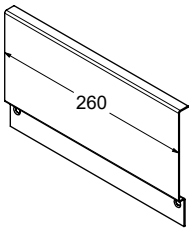

x 1
K1-1077070 *RAL 7016*
K1-1077071 *RAL 9005*
K1-1077072 *Pearl grey*
K1-1077073 *RAL 9016*

11

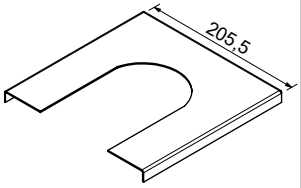

x 1
K1-1077175 *RAL 7016*
K1-1077176 *RAL 9005*
K1-1077177 *Pearl grey*
K1-1077178 *RAL 9016*

20

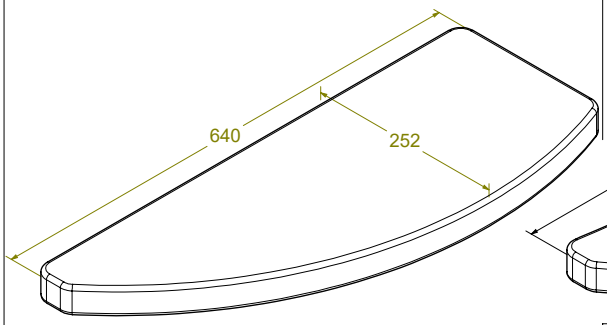

x 1
M2-1078260 Beech / Buche / Beuk / Hêtre / Bøg
M2-1078270 Oak / Eiche / Eik / Chêne / Eg
M2-1078280 Oak white / Eiche weiß / Eik wit / Chêne blanc / Eg hvid

21

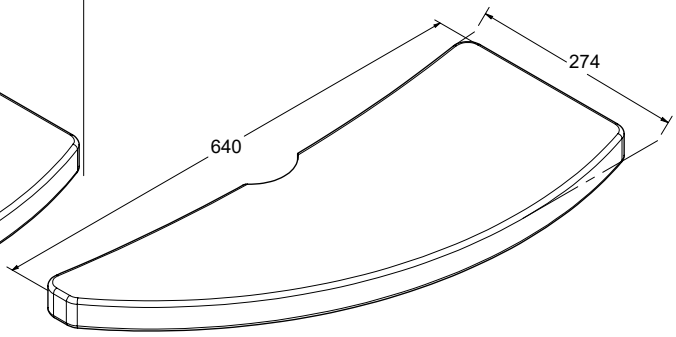

	10	11	12	13
x	9	10	11	12

M2-1078261 Beech / Buche / Beuk / Hêtre / Bøg
M2-1078271 Oak / Eiche / Eik / Chêne / Eg
M2-1078281 Oak white / Eiche weiß / Eik wit / Chêne blanc / Eg hvid

27

x 2
K1-1077720

28

x 5
K2-1077180 *RAL 7016*
K2-1077181 *RAL 9005*
K2-1077182 *Pearl grey*
K2-1077183 *RAL 9016*

29

x 25
K2-35426

30

x 10
K1-18099

31

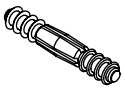

x 10
K3-08023

32

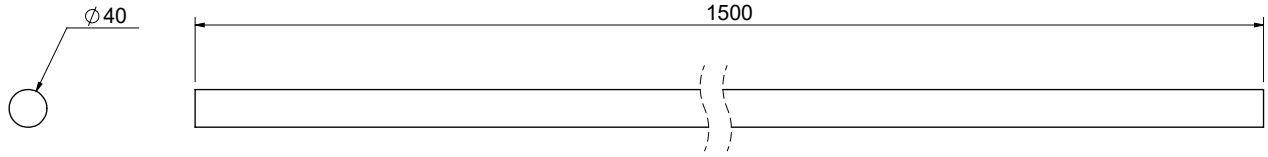

1078905 *Beech / Buche / Beuk / Hêtre / Bøg*
1078915 *Oak / Eiche / Eik / Chène / Eg*

	10	11	12	13
x	2	2	2	3

33

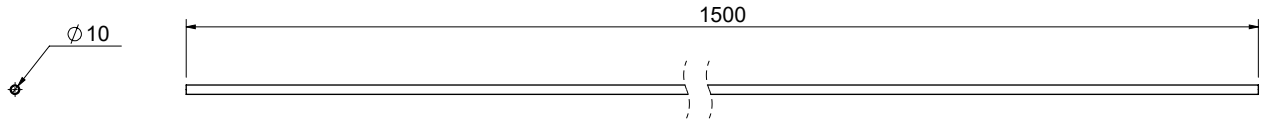

x 15
K1-18049

37

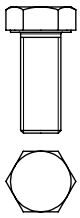

	10	11	12	13
x	10	11	12	13

R1-63500
M16 x 40

38

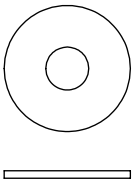

	10	11	12	13
x	10	11	12	13

K3-04053
Ø50 / Ø17

39

x 1
R2-86074
M16

40

x 9
K3-08001
Ø12 x 60

41

x 9
K3-04001
Ø10

42

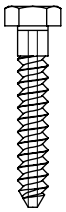

x 9
K3-06003
Ø10 x 60

44

	10	11	12	13
x	60	66	72	78

R1-63267
Ø6 x 35 TX30

46

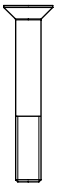

	10	11	12	13
x	5	6	6	7

K3-02097
M10 x 70

47

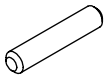

x 14
R3-91415
Ø8 x 40

48

	10	11	12	13
x	5	6	6	7

K3-06239
Ø4,5 x 25

49

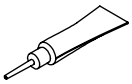

x 1
K3-90001

50

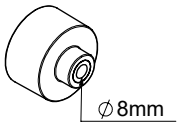

x 1
K1-01810

51

x 2
K3-06022
Ø5 x 35 TX25

56

x 2
K3-08006
Ø6 x 40

58

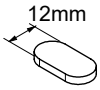

x 8
R3-20590

59

Wood glue
Holzkleber
Colle à bois
Trælim

x 1
K3-90005

60

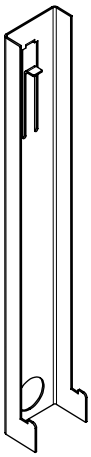

x 1
H2-63530

61

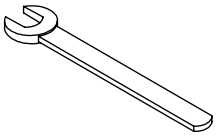

x 1
R1-63501
24 mm

62

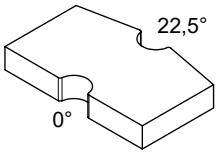

x 1
H3-35920

63

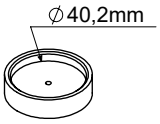

x 1
K1-01620

Tools not included!
Werkzeuge nicht enthalten!
Gereedschap niet inbegrepen!
Outils non inclus!
Værktøj ikke inkluderet!

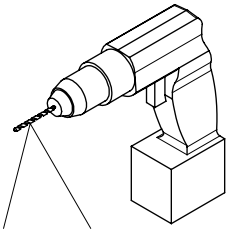

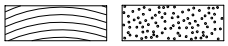

∅ 3mm
∅ 4mm
∅ 6mm
∅ 8mm
∅ 10mm

∅ 6mm
∅ 12mm

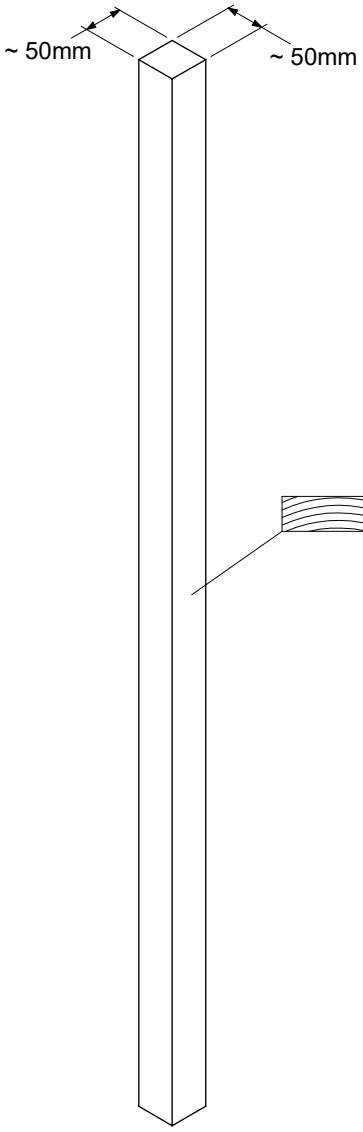

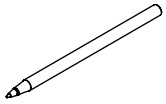

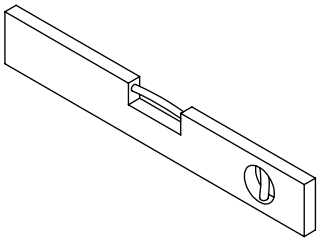

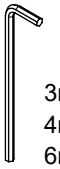

3mm
4mm
6mm

16mm

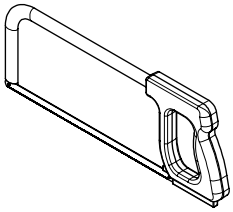

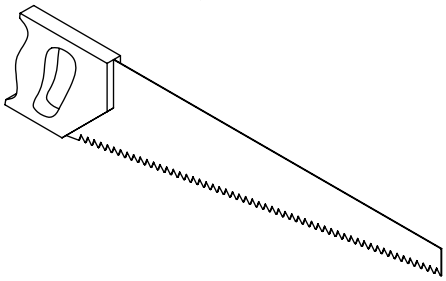

TX25
TX30
PZ2

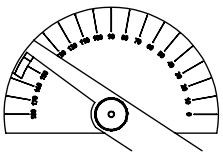

Protractor
Winkelmesser
Gradenboog
Rapporteur d’angle
Vinkelmåler

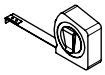

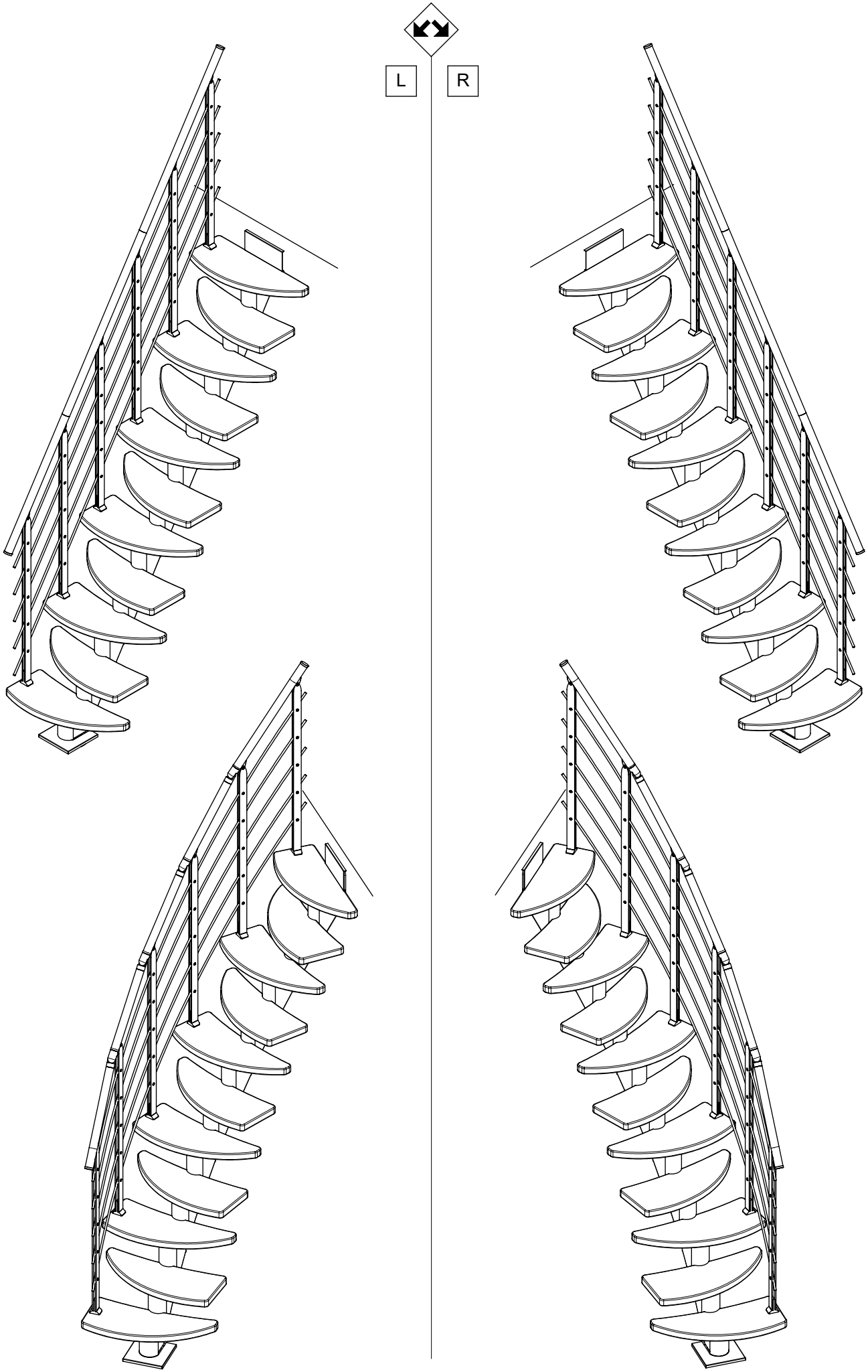
L
R

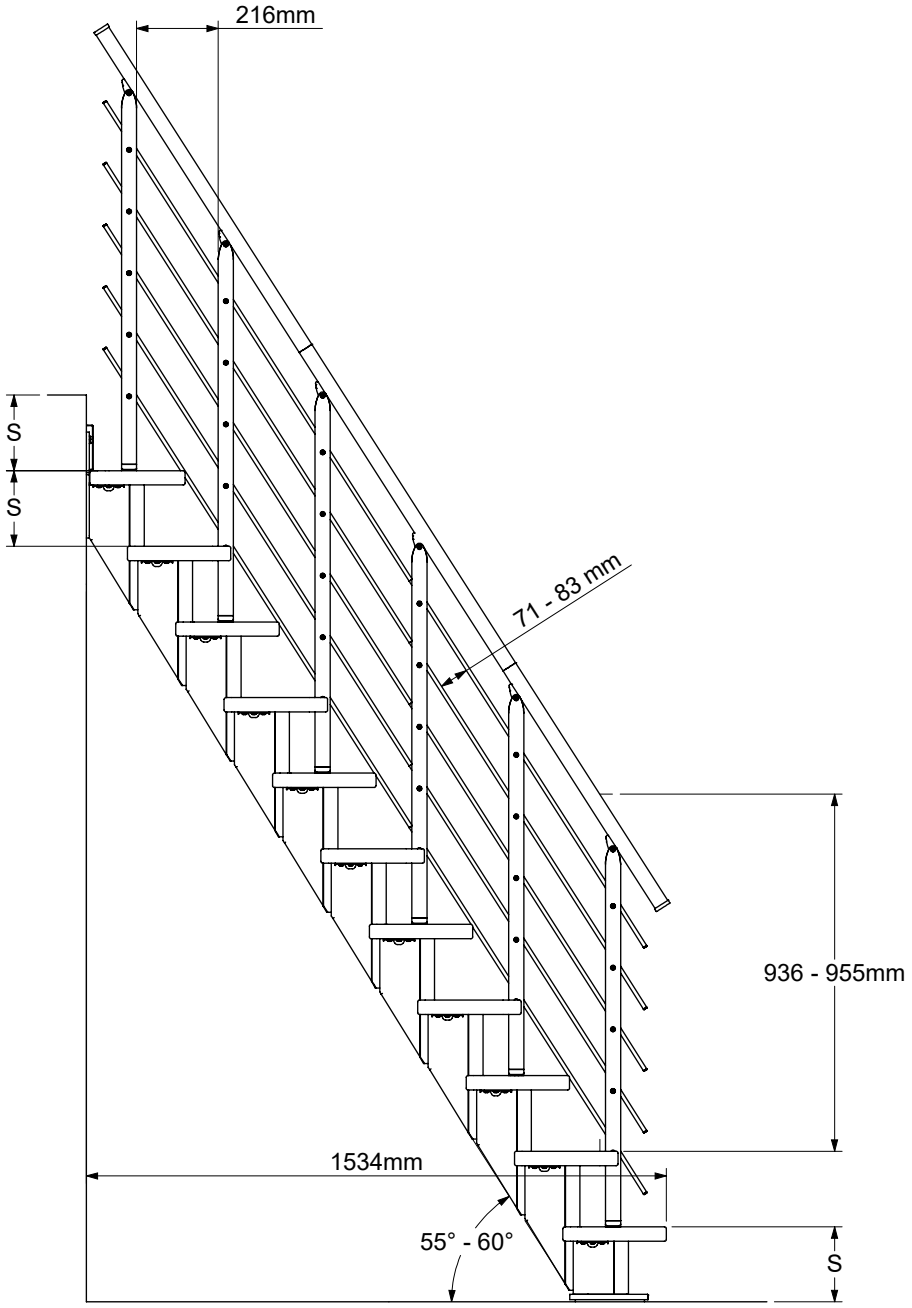

$$S = \frac{H}{T + 1}$$

min S	max S
185 mm	225 mm

T	min H	max H
9	1850 mm	2250 mm
10	2035 mm	2475 mm
11	2220 mm	2700 mm
12	2405 mm	2925 mm
13	2590 mm	3150 mm

H: 2400 mm, T: 11 st(pcs)

$$S = \frac{2400\ \text{mm}}{11 + 1} = 200\ \text{mm}$$

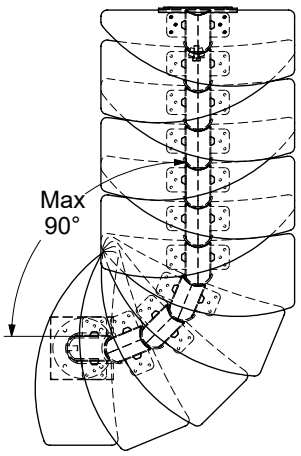

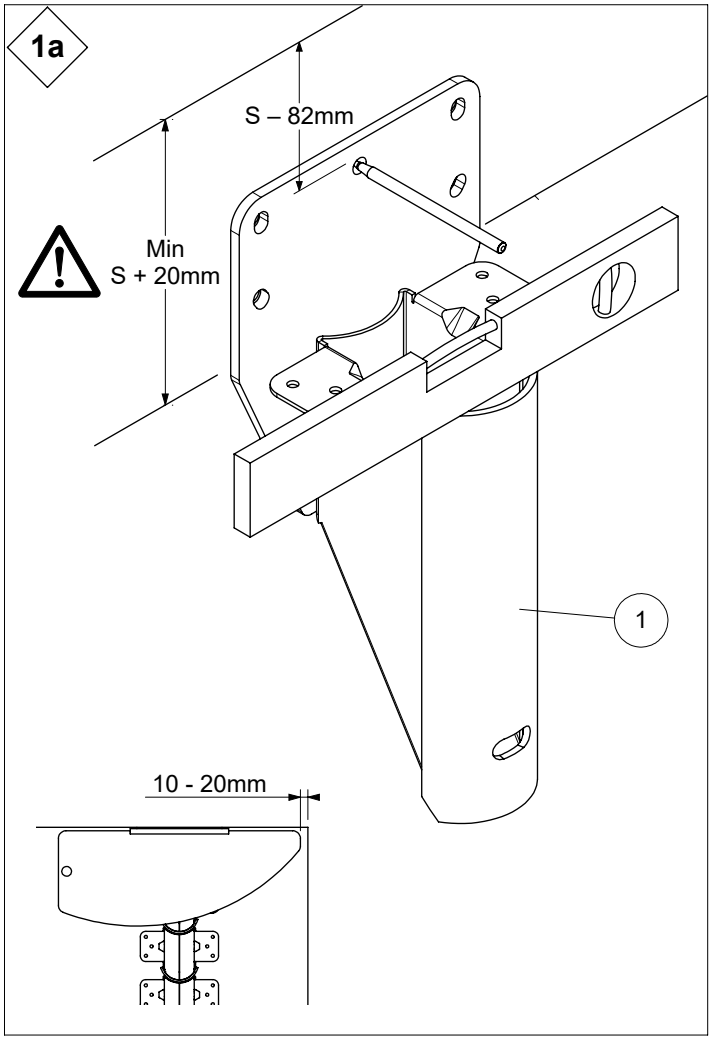
1a
S – 82mm
Min
S + 20mm
1
10 - 20mm

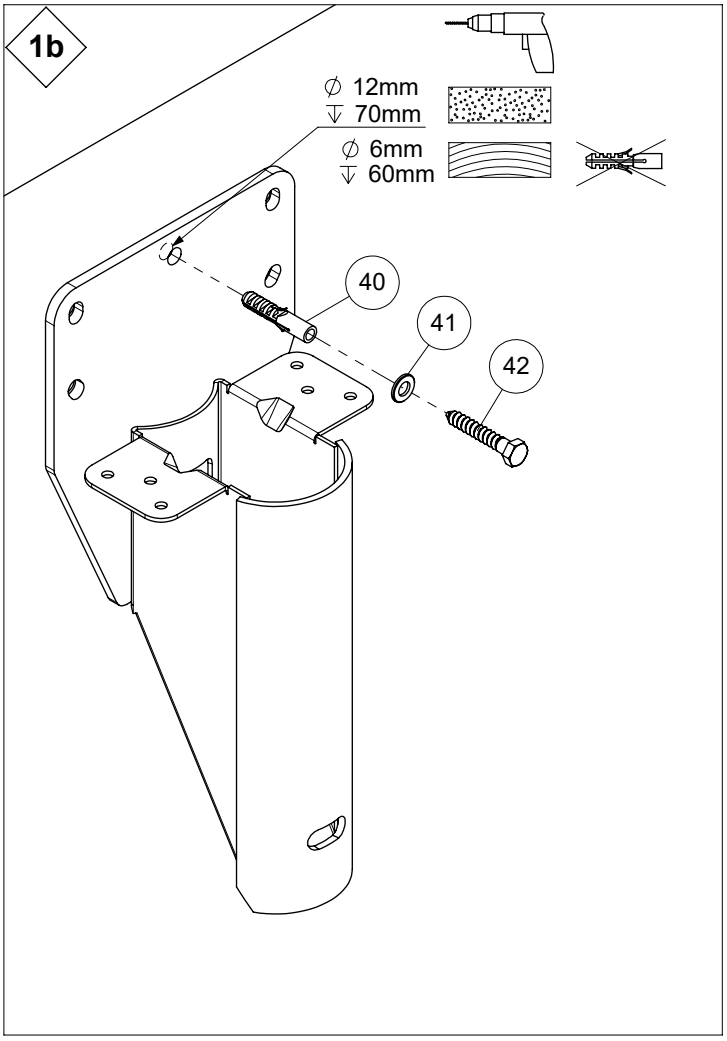
1b
∅ 12mm
↓ 70mm
∅ 6mm
↓ 60mm
40
41
42

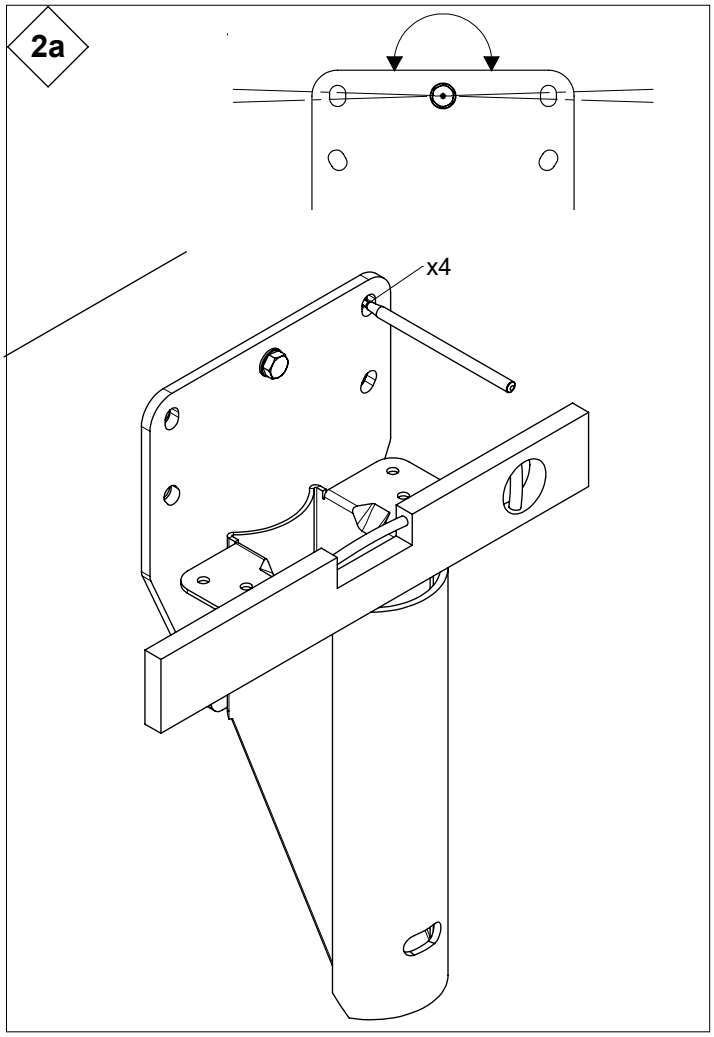
2a
x4

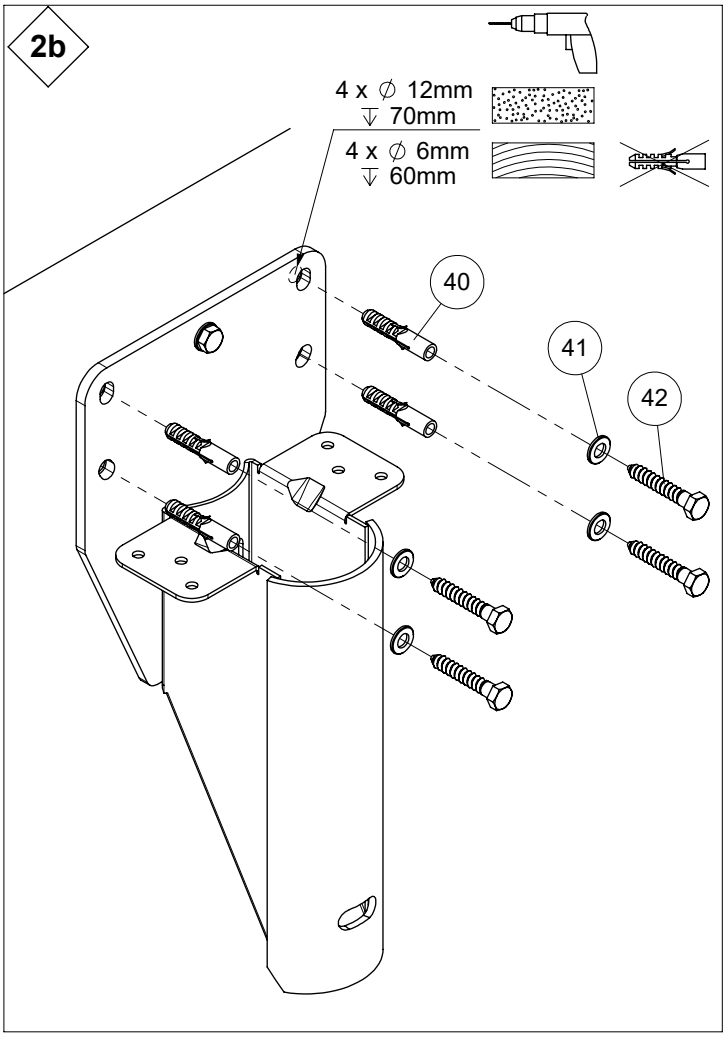
2b
4 x ∅ 12mm
↓ 70mm
4 x ∅ 6mm
↓ 60mm
40
41
42

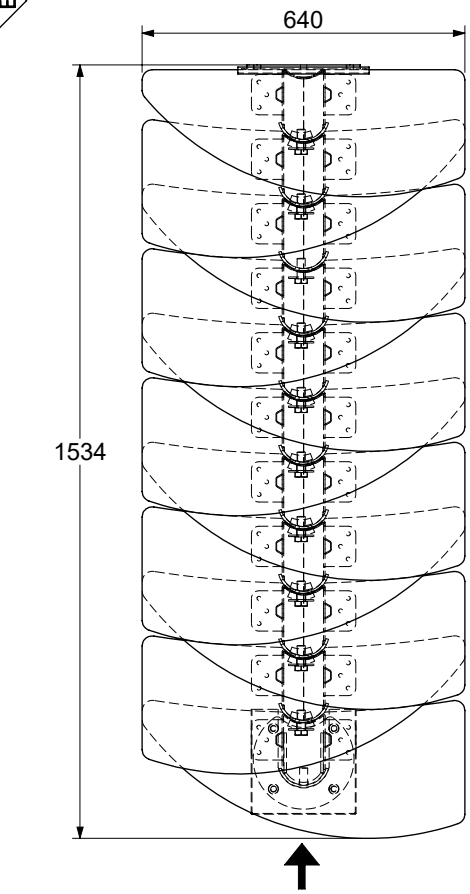
640
1534

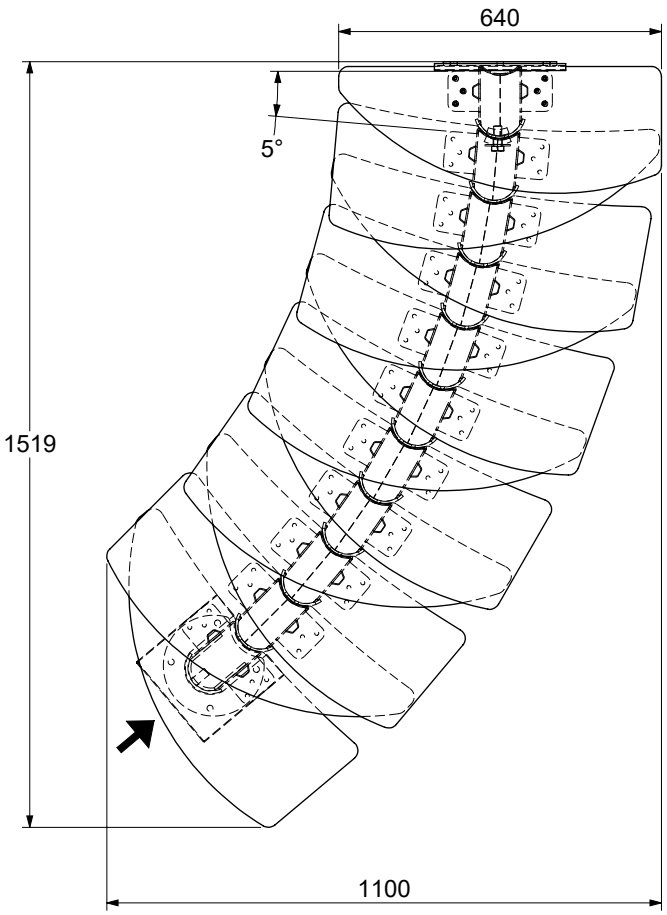
640
5°
1519
1100

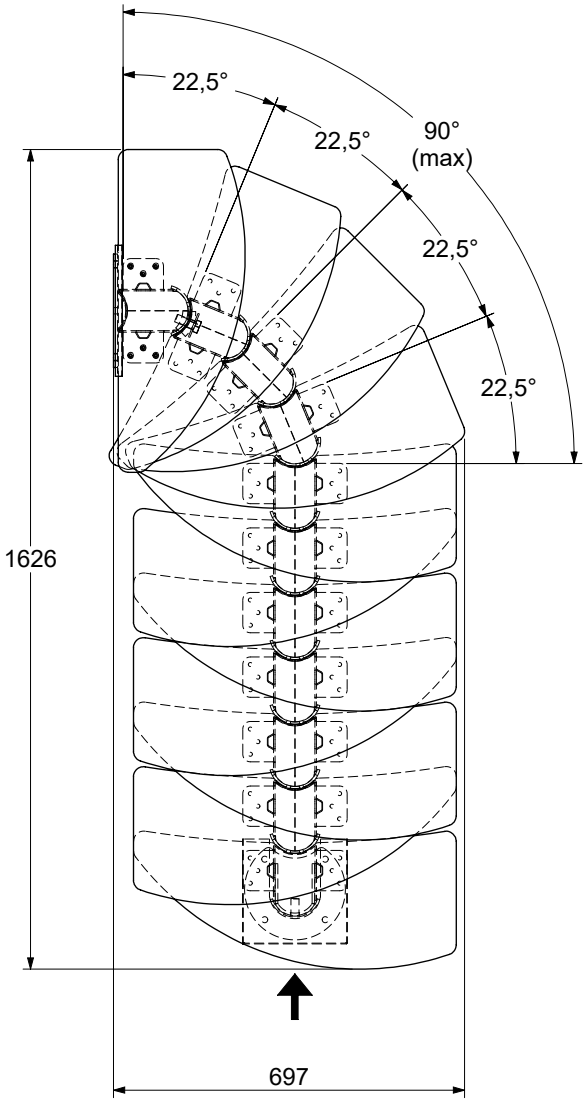
22,5°
22,5°
90°
(max)
22,5°
22,5°
1626
697

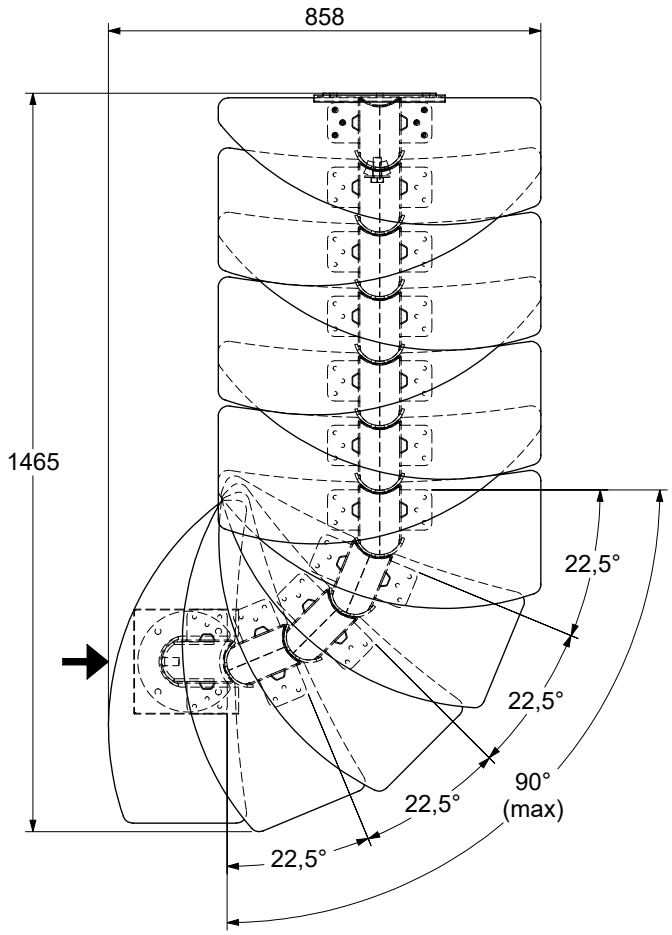
858
1465
22,5°
22,5°
22,5°
90°
(max)
22,5°

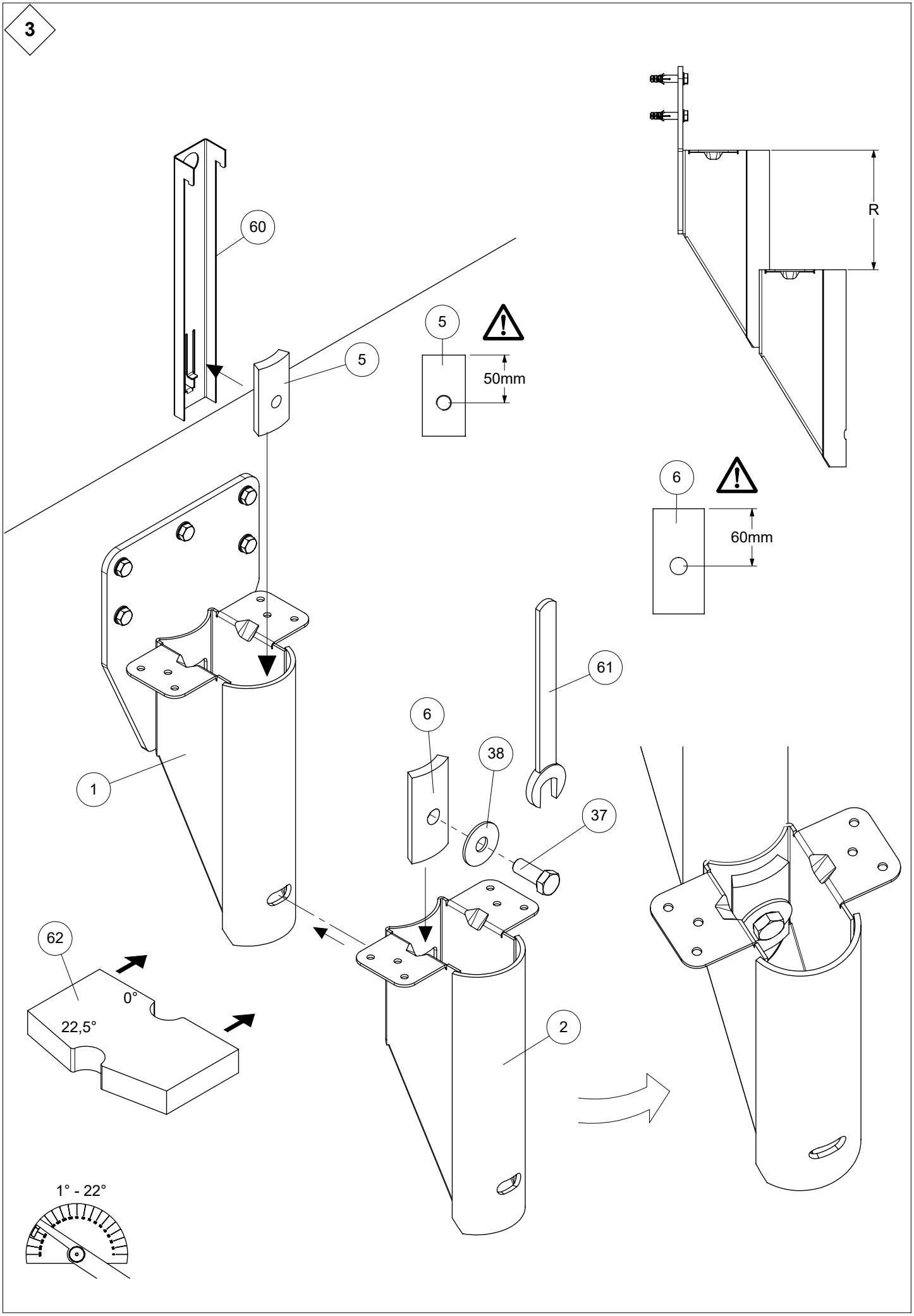
3
60
5
5
50mm
R
6
60mm
61
6
38
37
1
62
0°
22,5°
2
1° - 22°

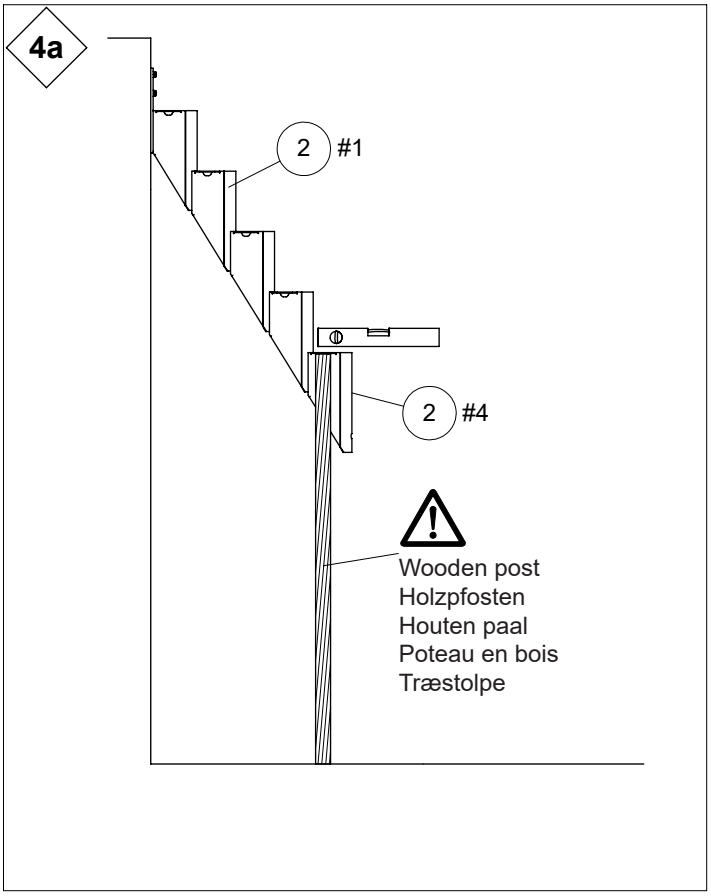
4a
2
#1
2
#4
Wooden post
Holzpfosten
Houten paal
Poteau en bois
Træstolpe

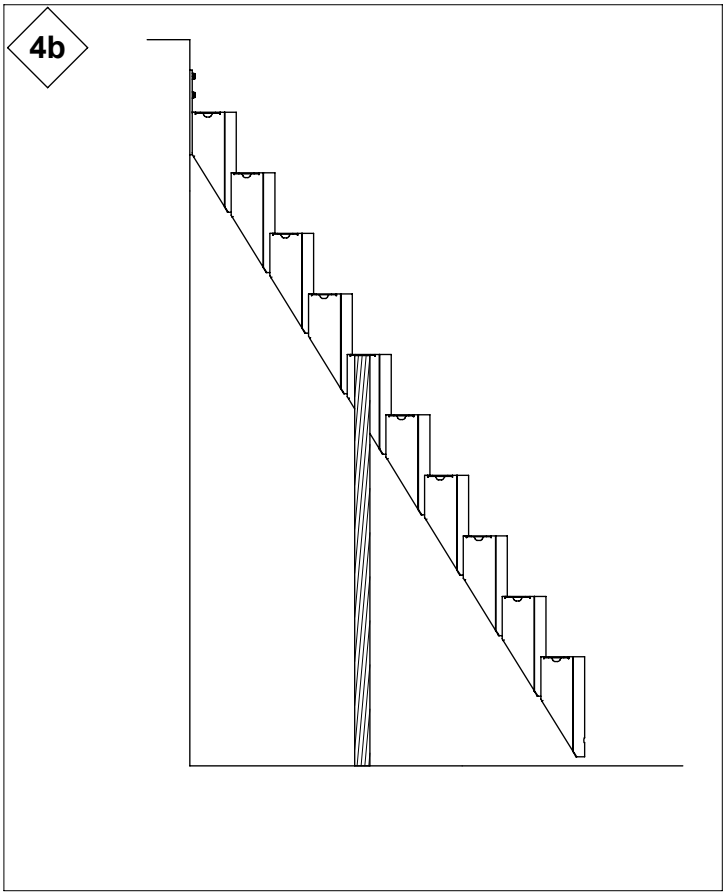
4b

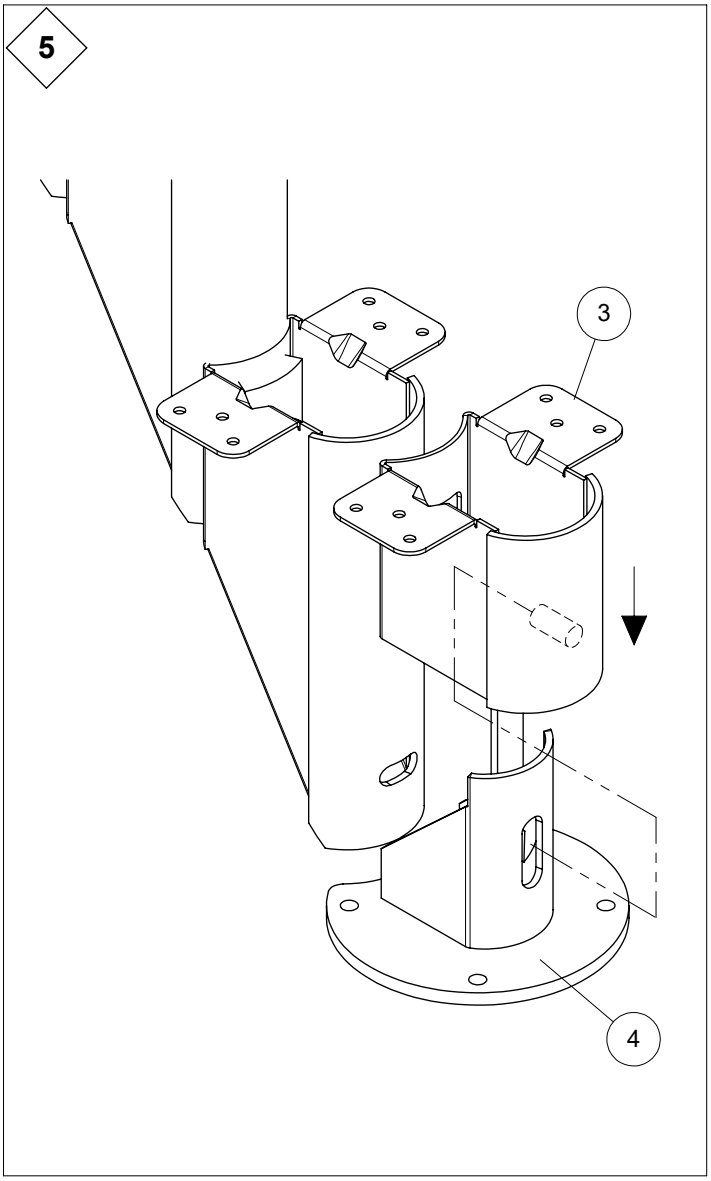
5
3
4

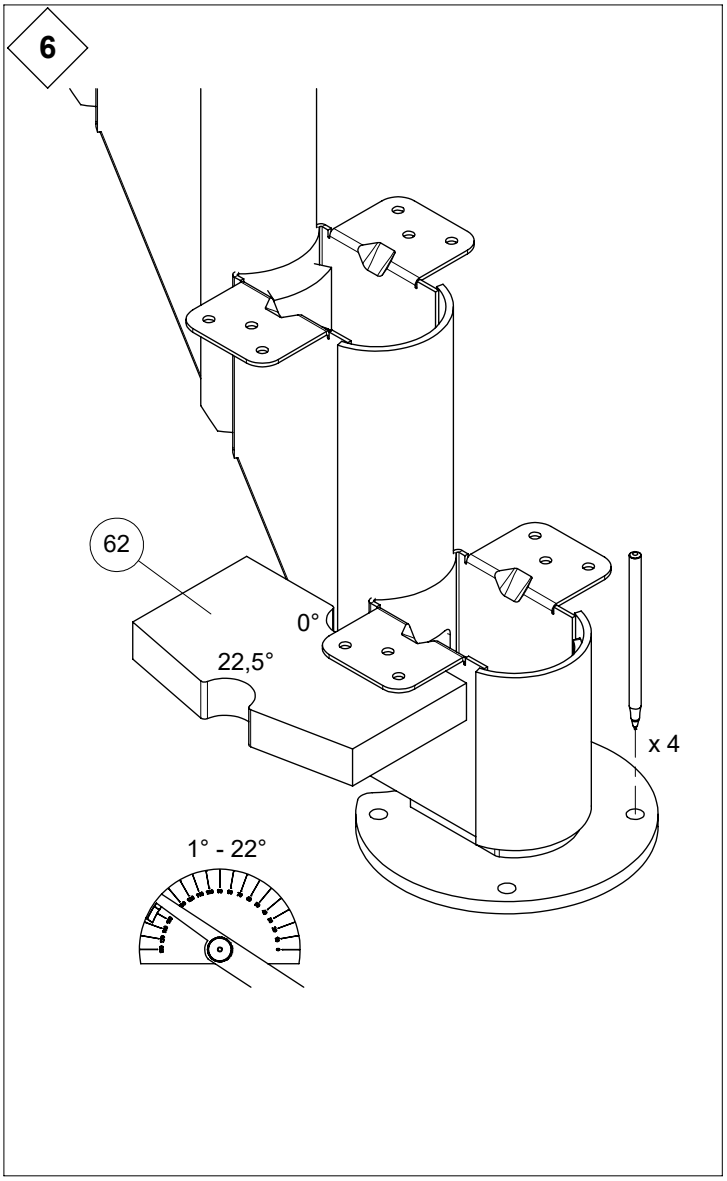
6
62
0°
22,5°
x 4
1° - 22°

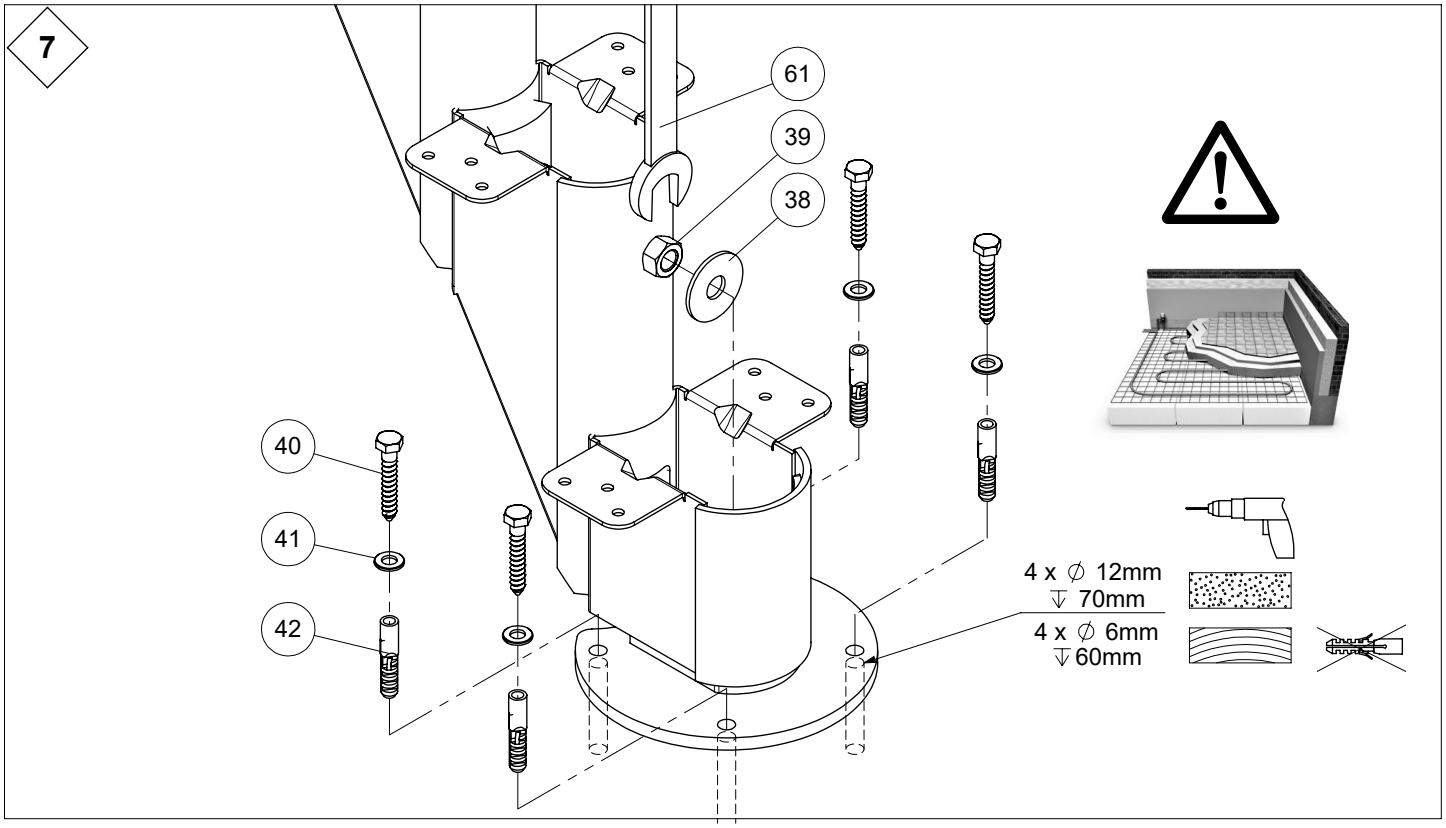
7
61
39
38
40
41
42
4 x ∅ 12mm
⇓ 70mm
4 x ∅ 6mm
⇓ 60mm

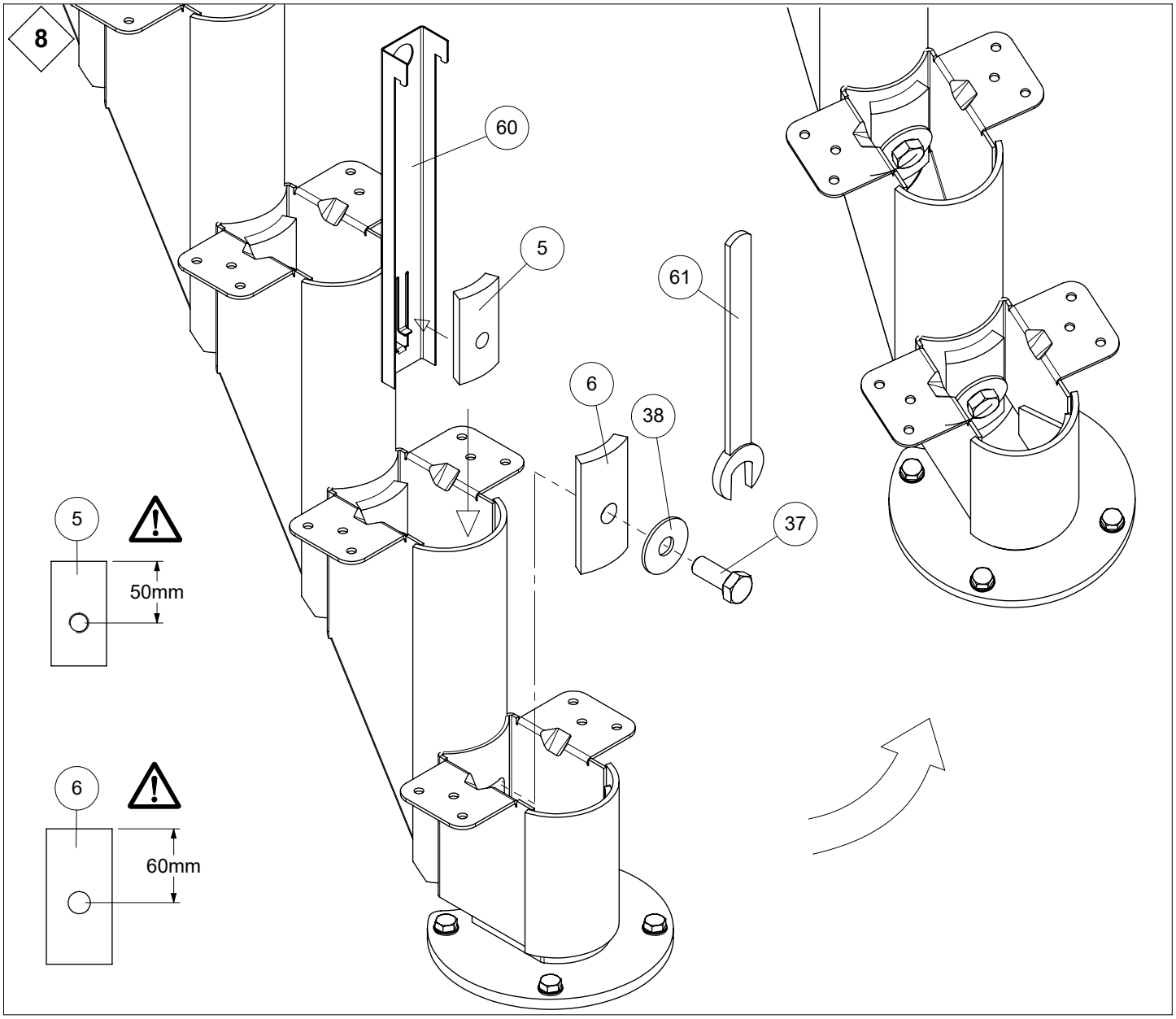
8
60
5
61
6
38
37
5
50mm
6
60mm

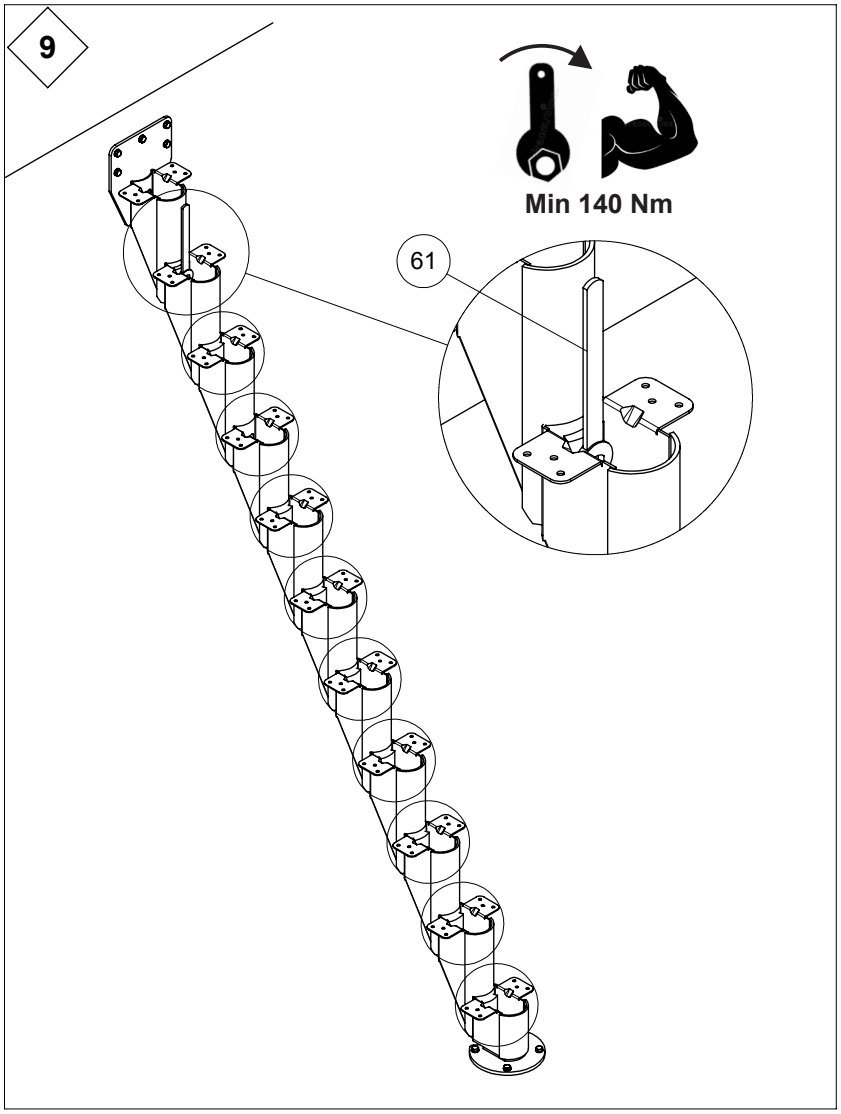
9
Min 140 Nm
61

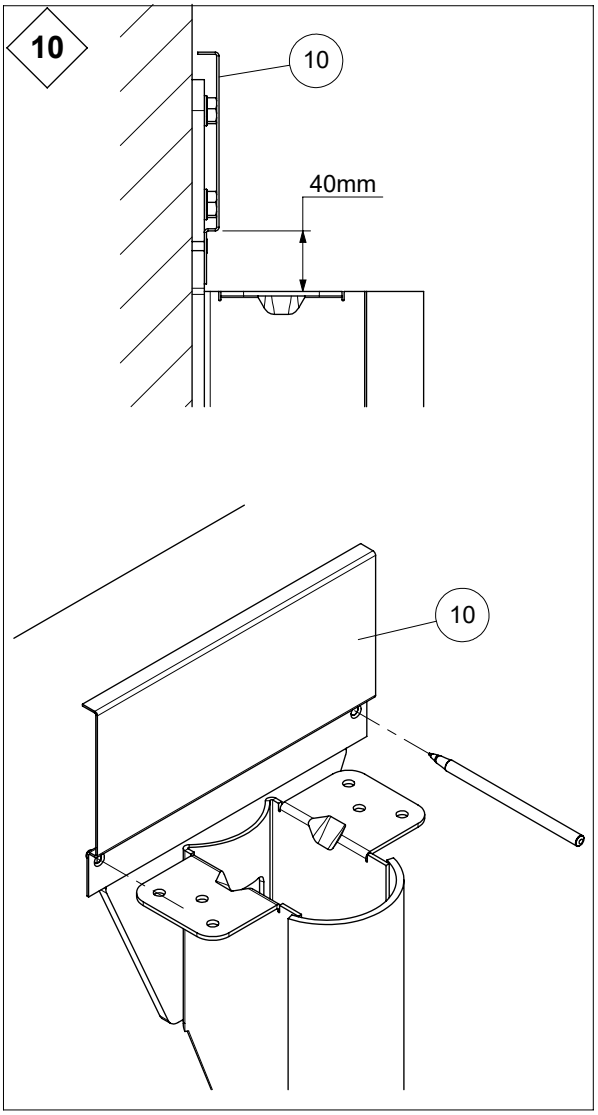
10
10
40mm
10

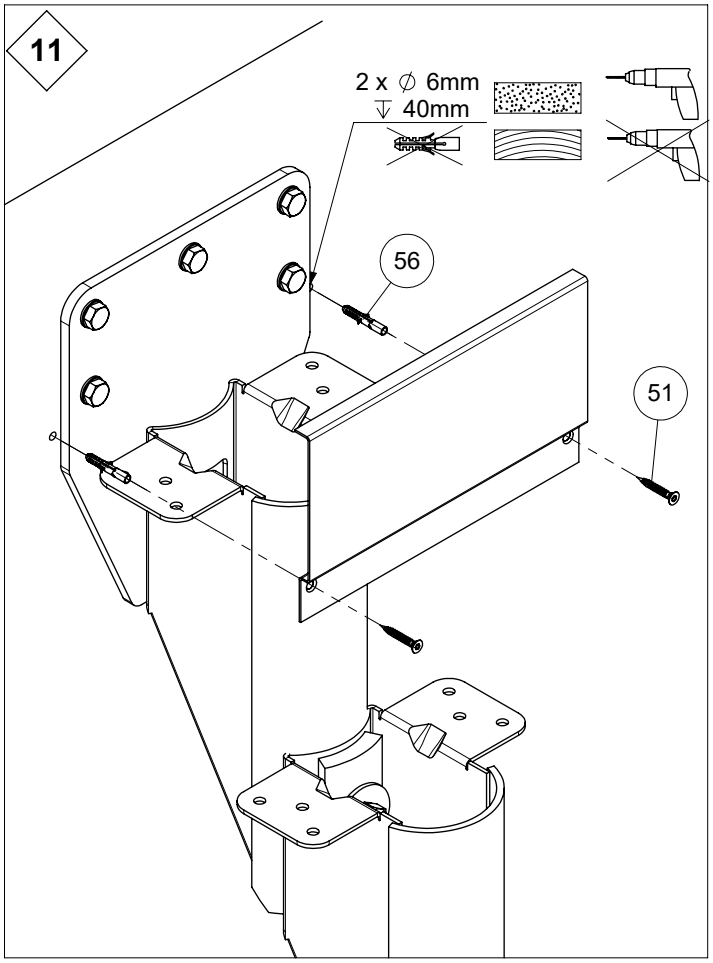
11
2 x ∅ 6mm
40mm
56
51

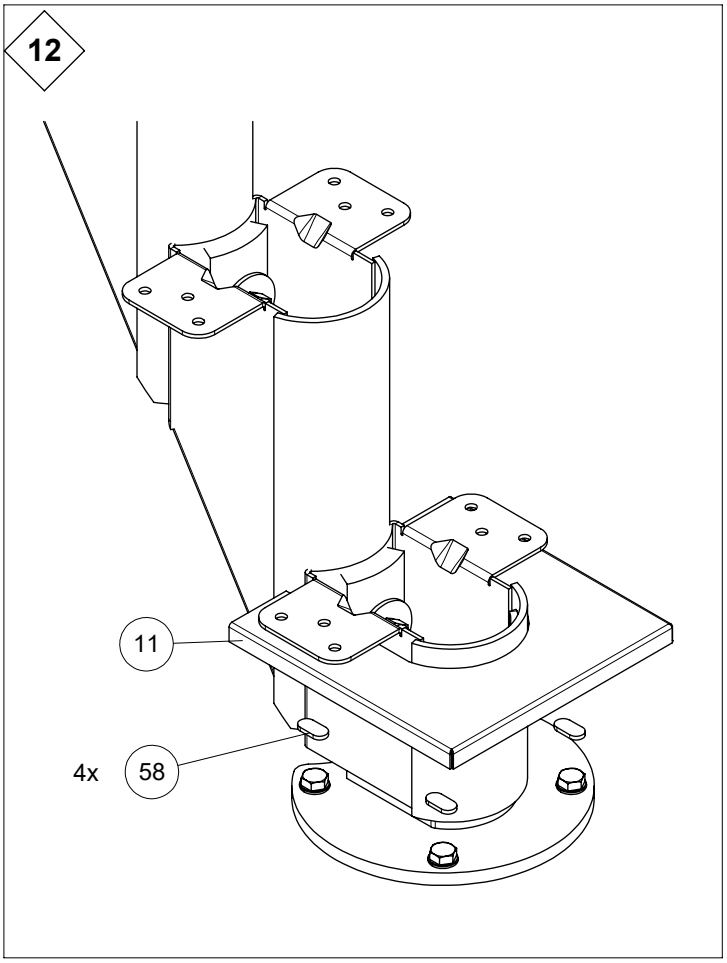
12
11
4x
58

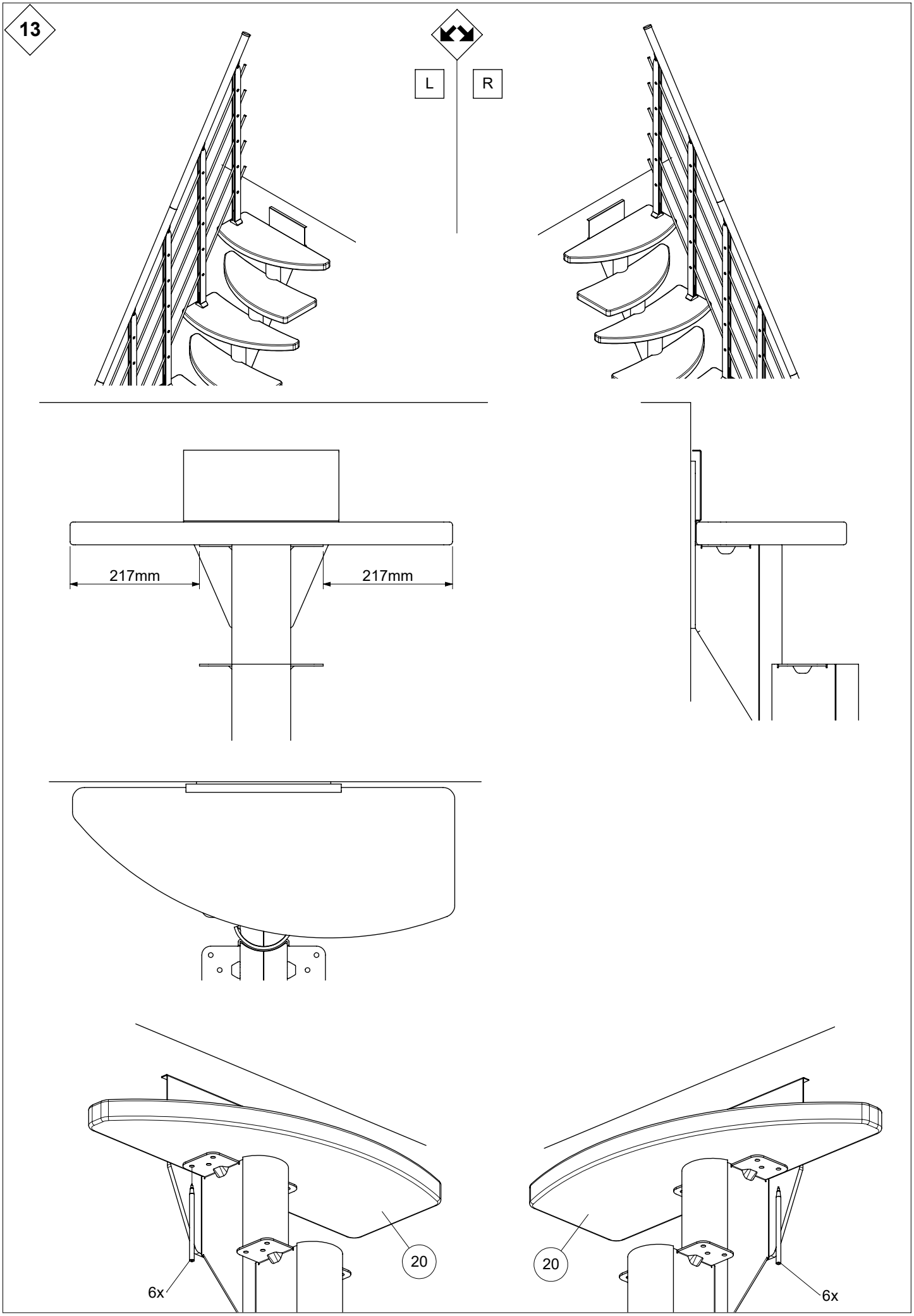
13
L
R
217mm
217mm
20
6x
20
6x

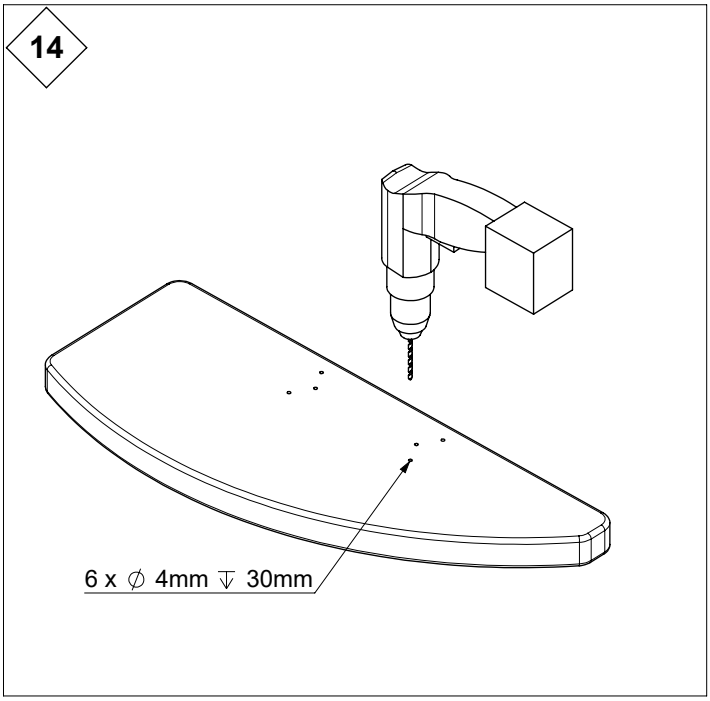
14
6 x ∅ 4mm ↧ 30mm

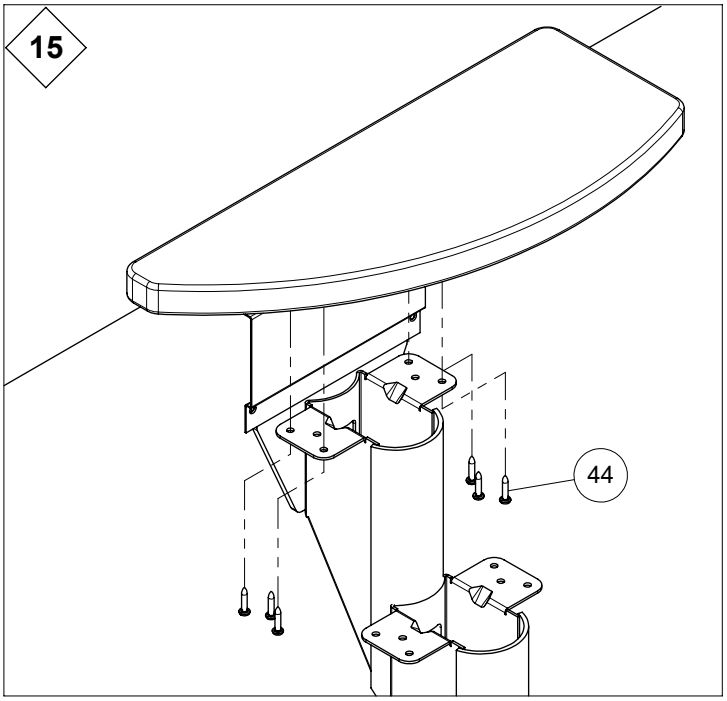
15
44

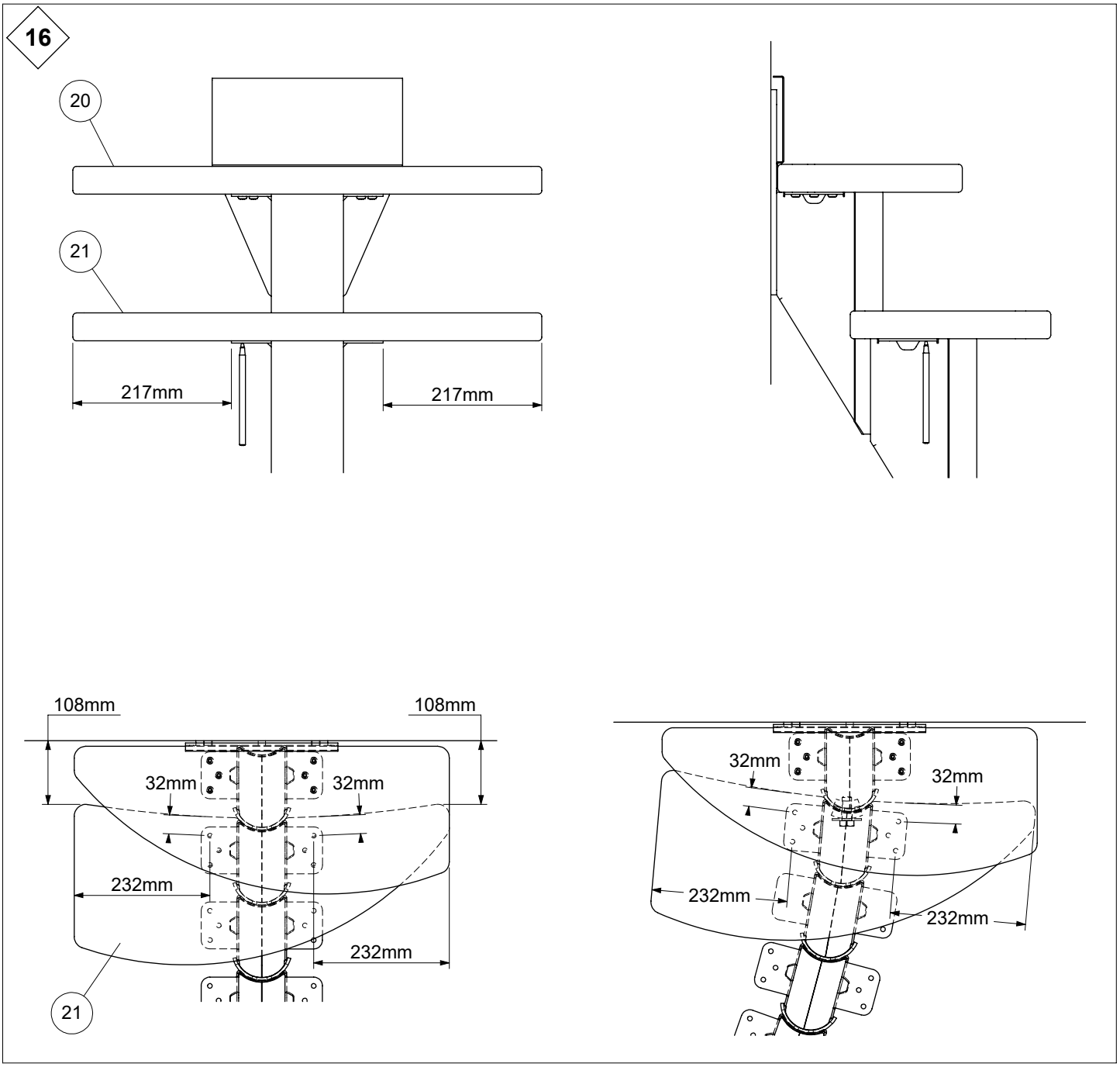
16
20
21
217mm
217mm
108mm
108mm
32mm
32mm
232mm
232mm
21
32mm
32mm
232mm
232mm

17

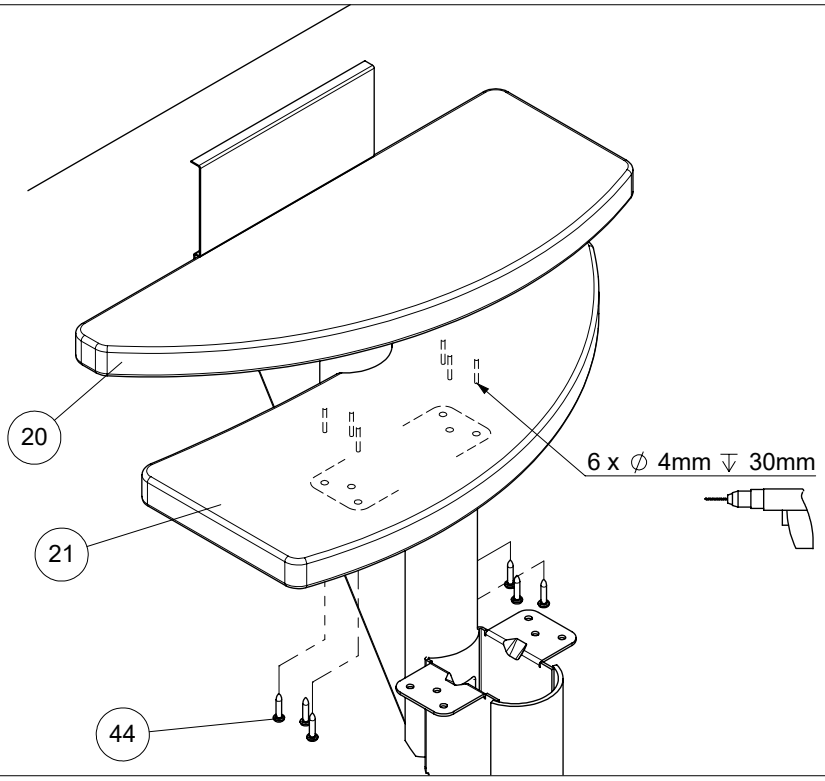

18

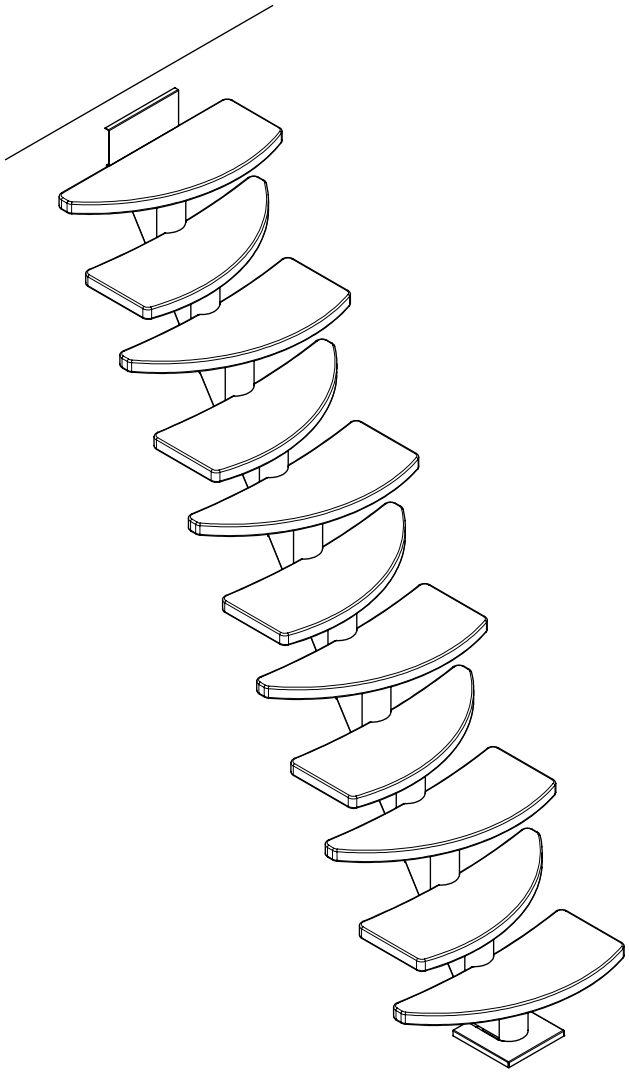

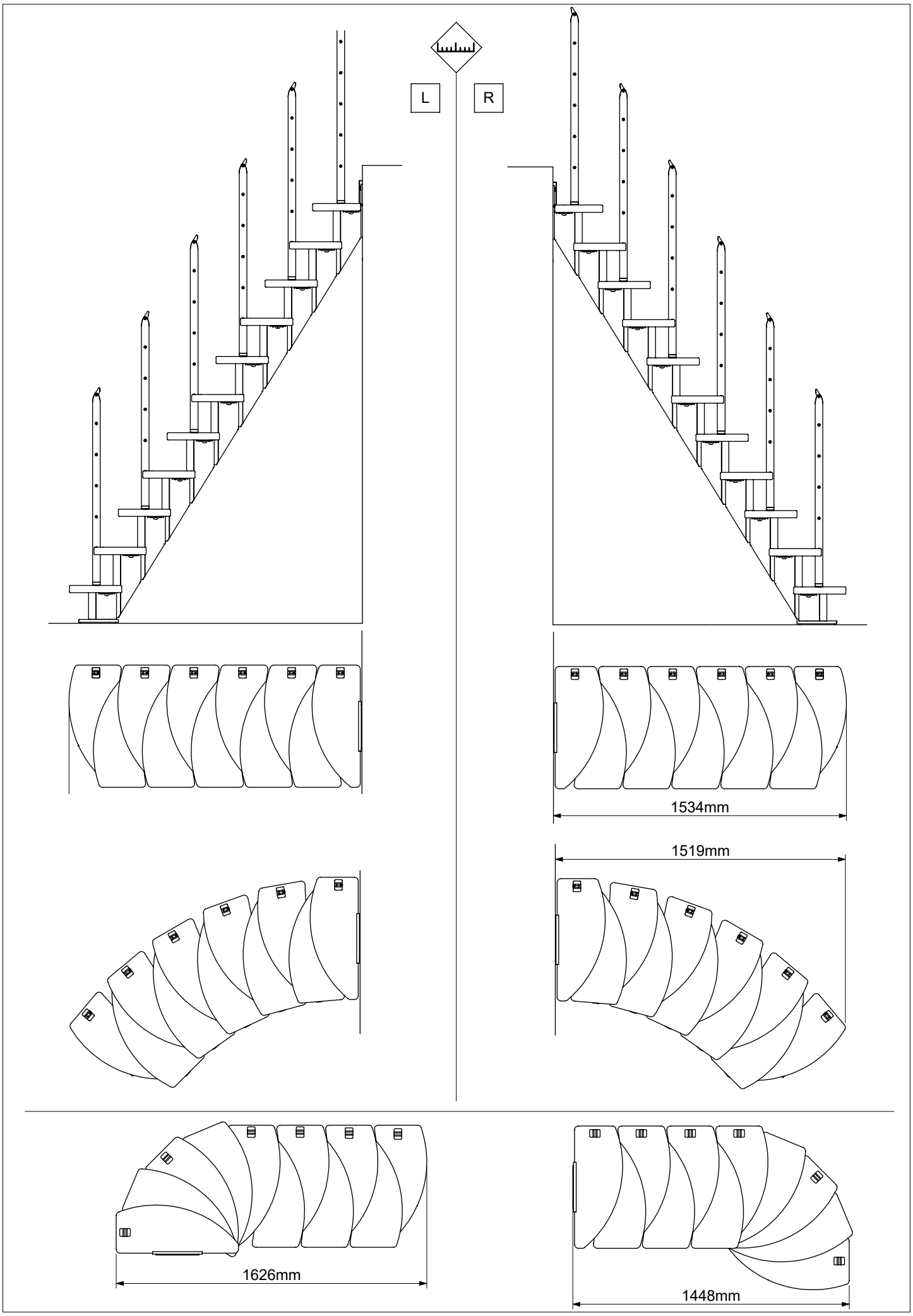
L
R
1534mm
1519mm
1626mm
1448mm

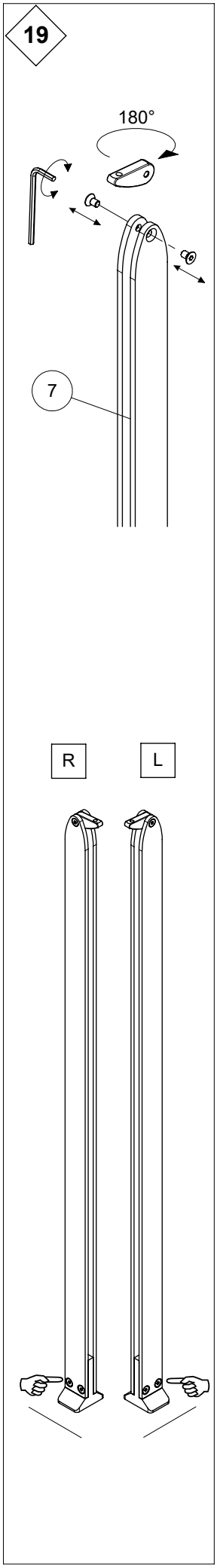
19
180°
7
R
L

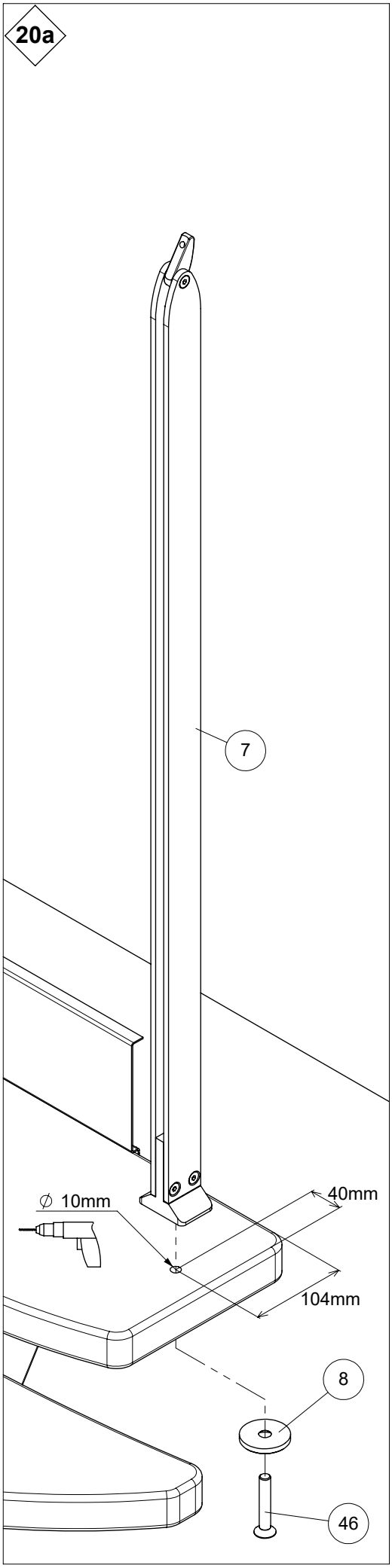
20a
7
∅ 10mm
40mm
104mm
8
46

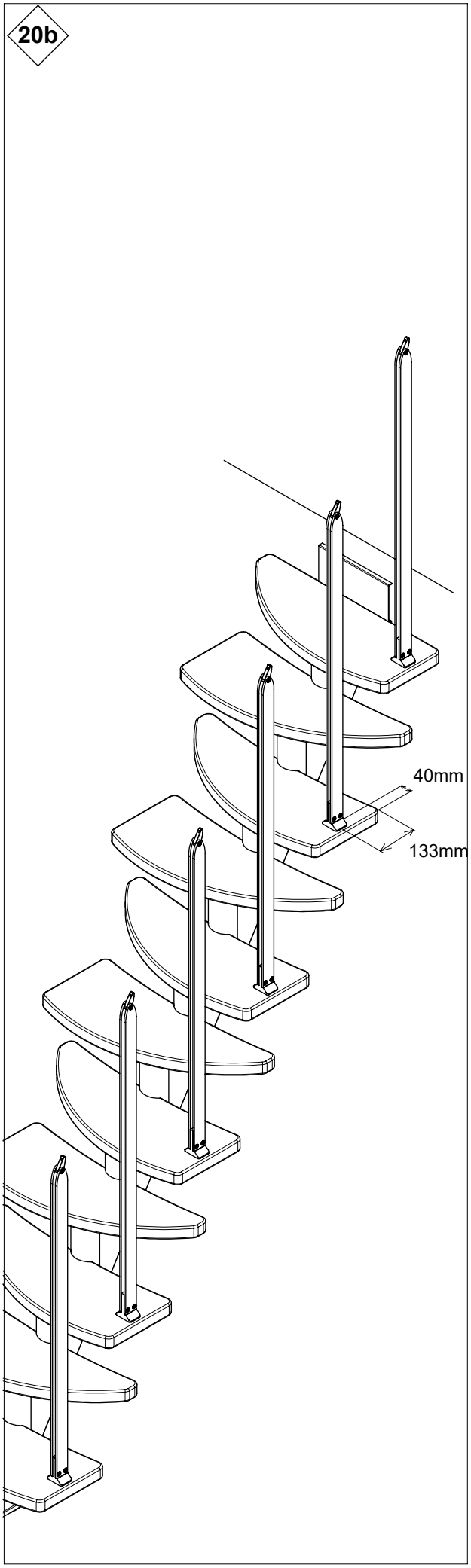
20b
40mm
133mm

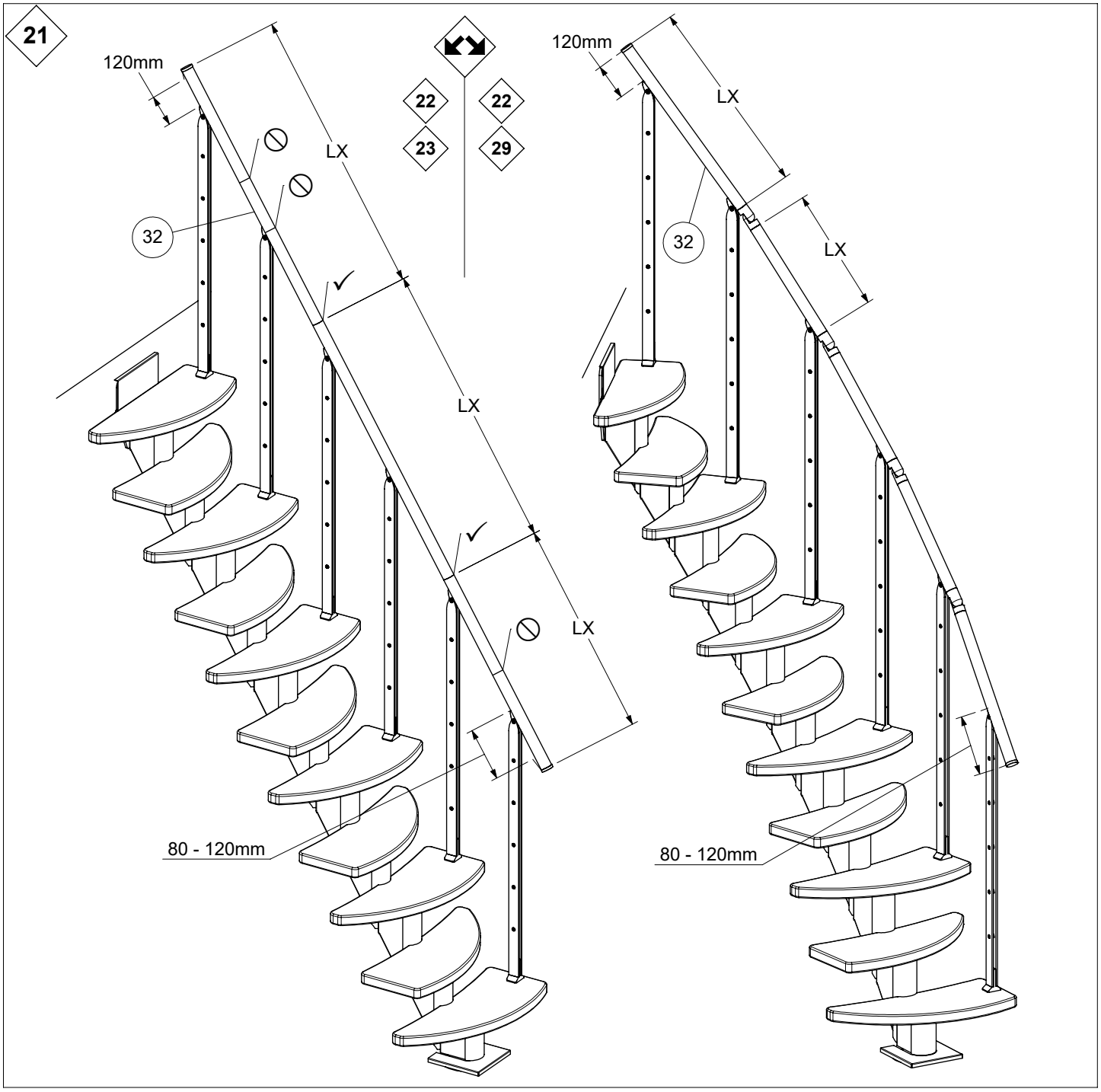
21
120mm
LX
22
22
23
29
32
LX
LX
LX
80 - 120mm
120mm
LX
32
LX
80 - 120mm

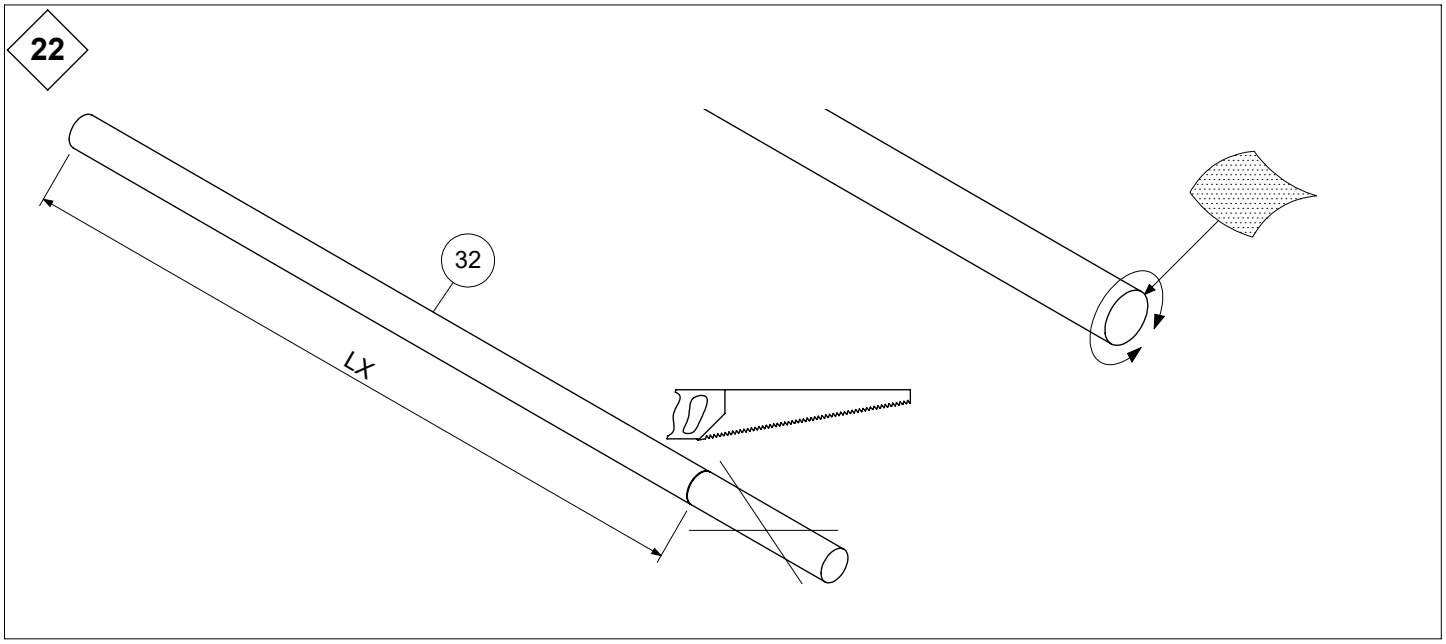
22
32
LX

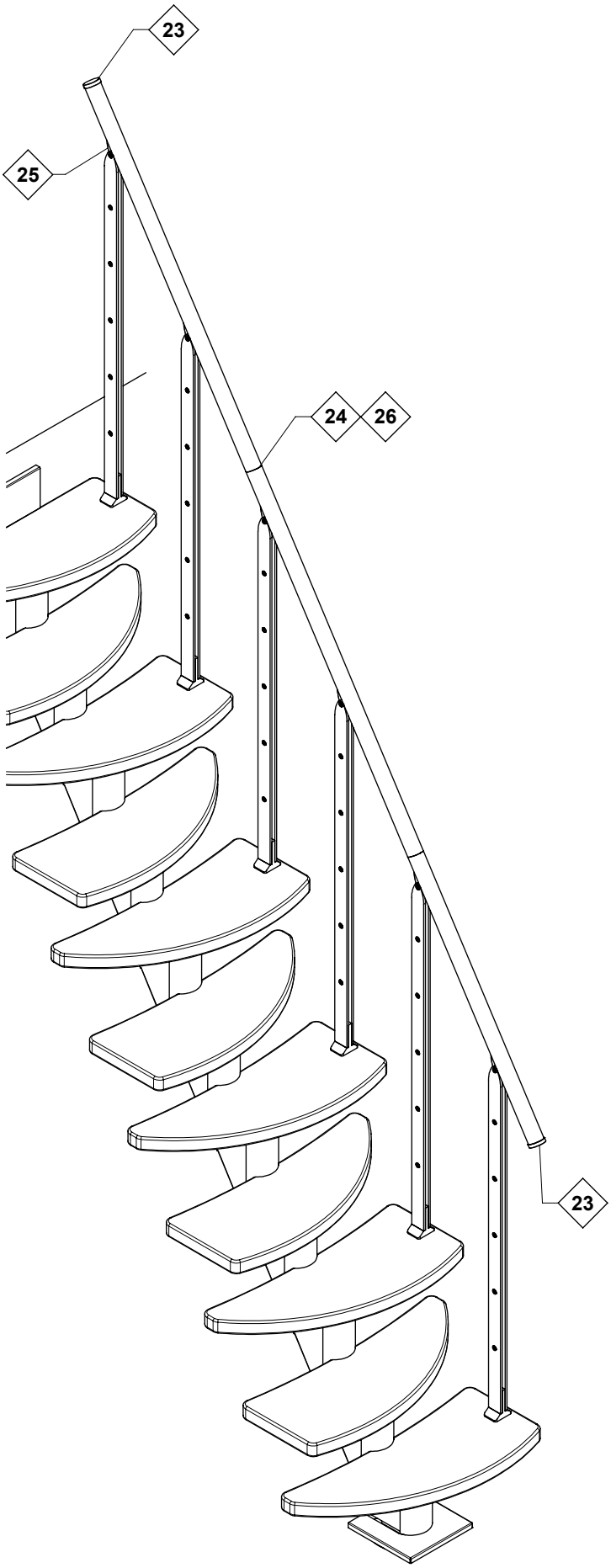
23
25
24
26
23

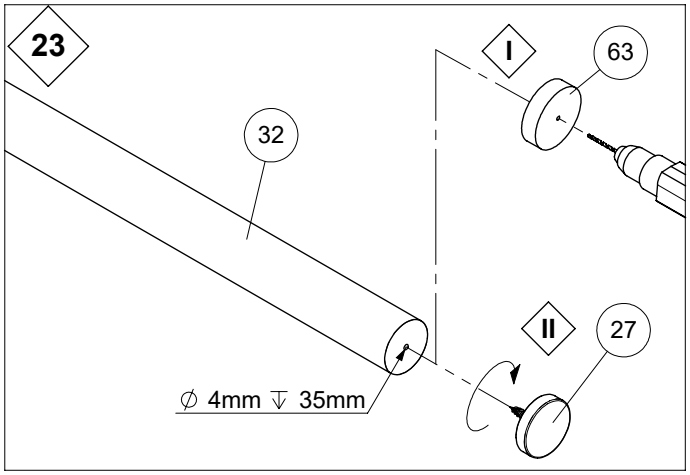
23
I
63
32
II
27
∅ 4mm ↓ 35mm

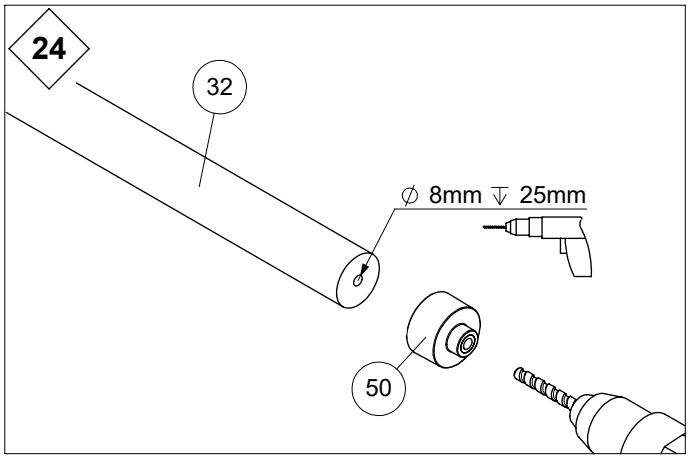
24
32
∅ 8mm ↓ 25mm
50

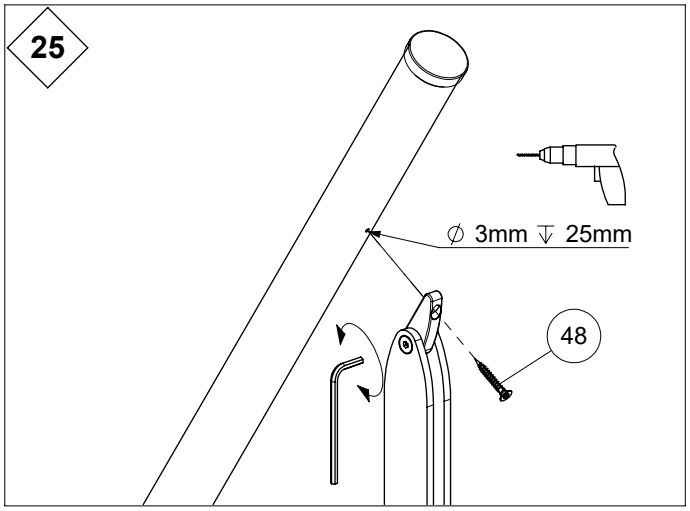
25
∅ 3mm ↓ 25mm
48

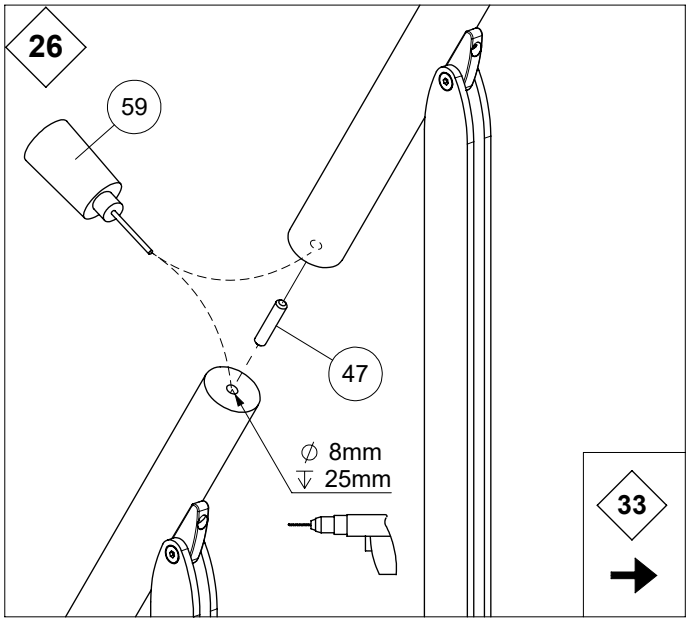
26
59
47
∅ 8mm
↓ 25mm
33

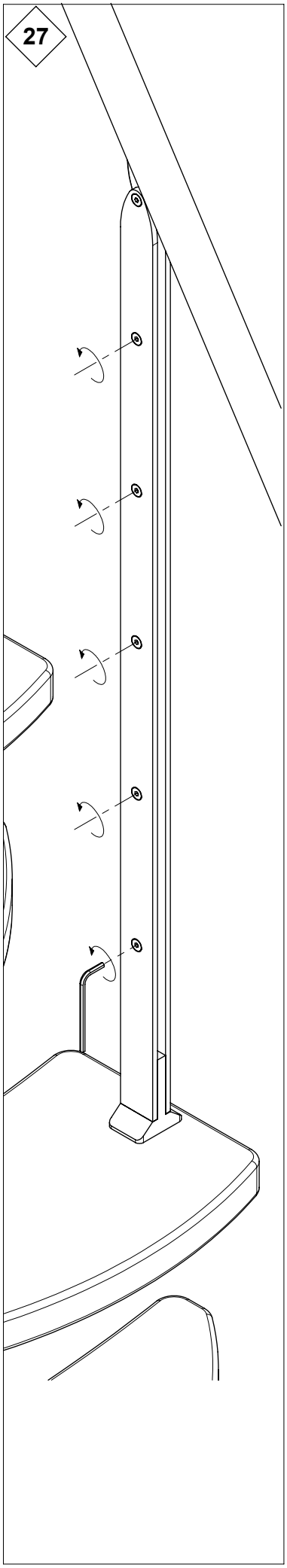
27

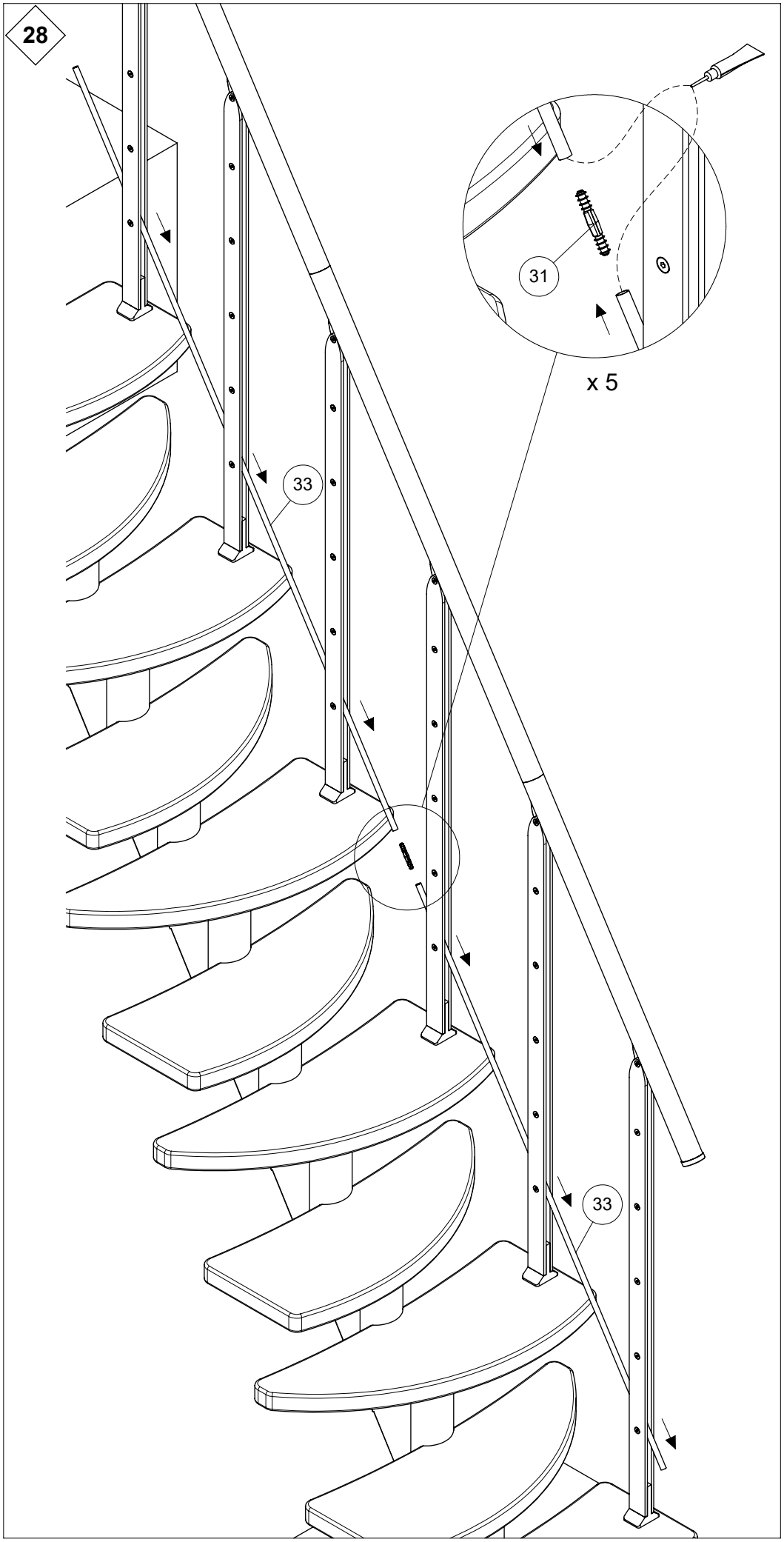
28
31
x 5
33
33

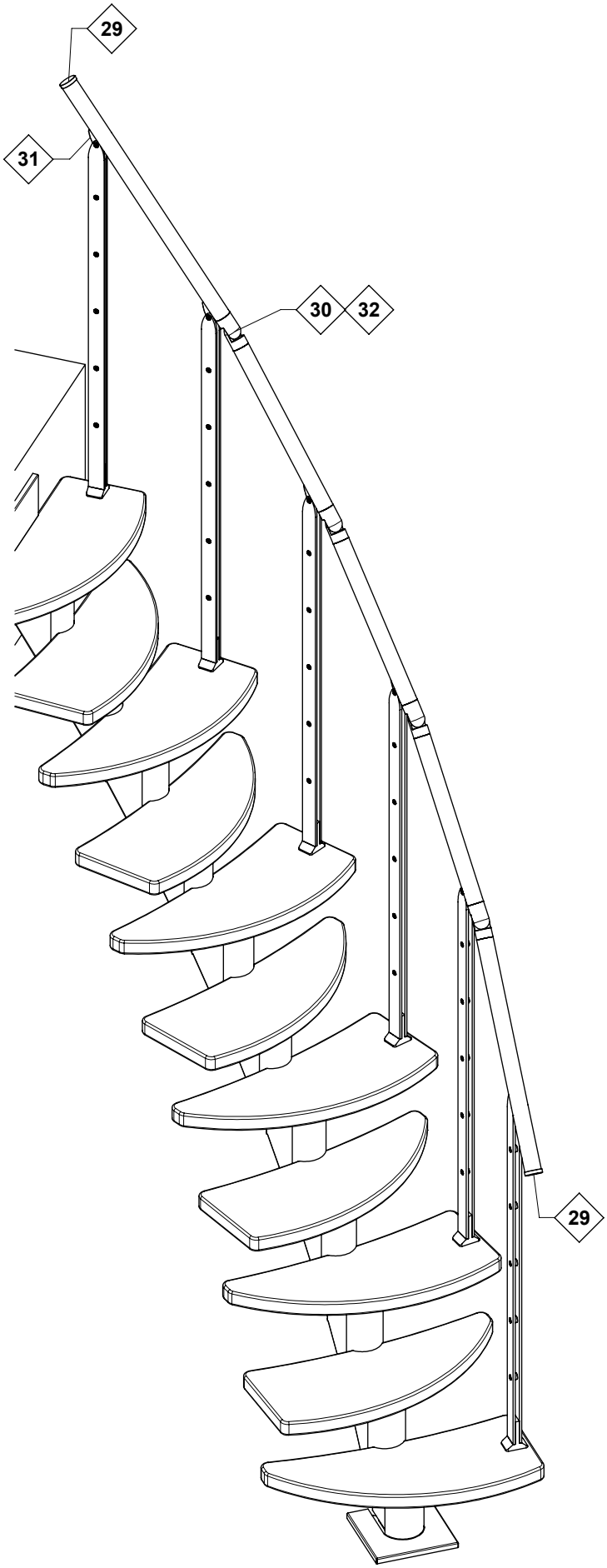
29
31
30
32
29

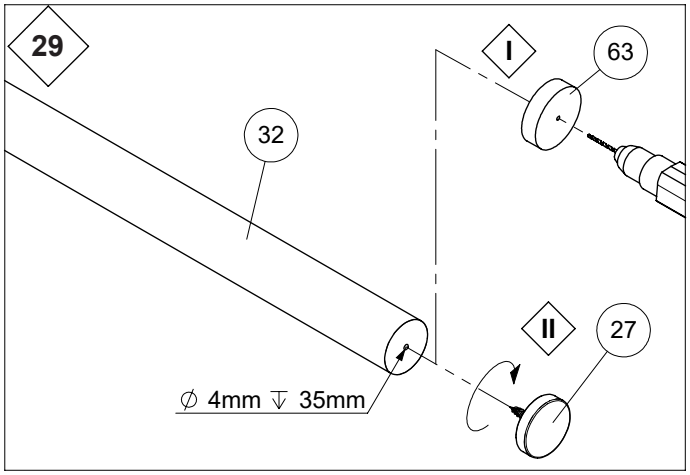
29
I
63
32
II
27
∅ 4mm ↧ 35mm

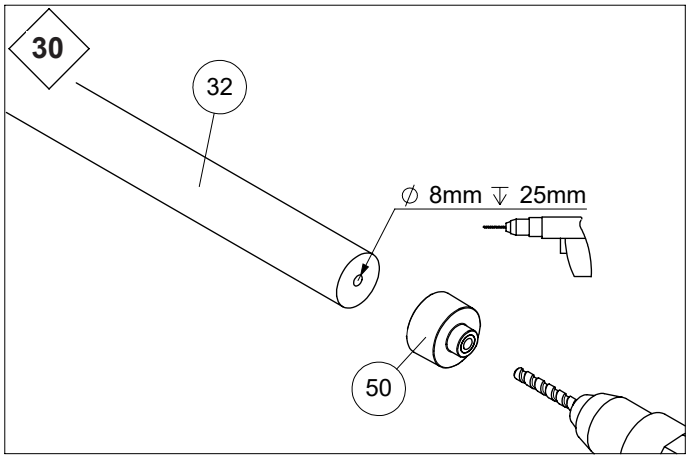
30
32
∅ 8mm ↧ 25mm
50

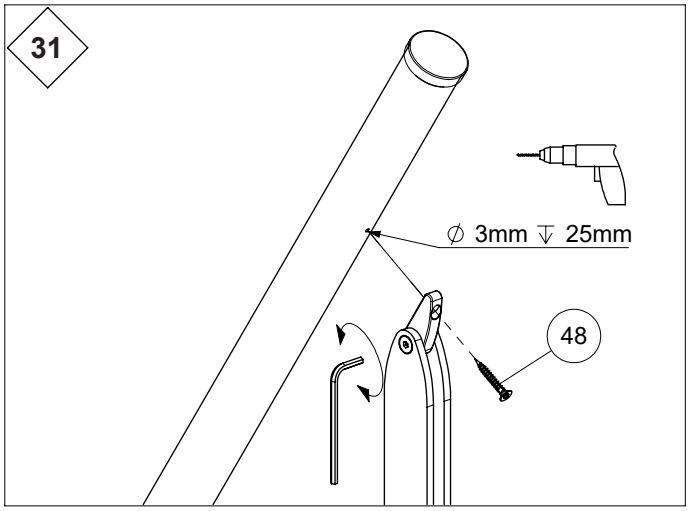
31
∅ 3mm ↧ 25mm
48

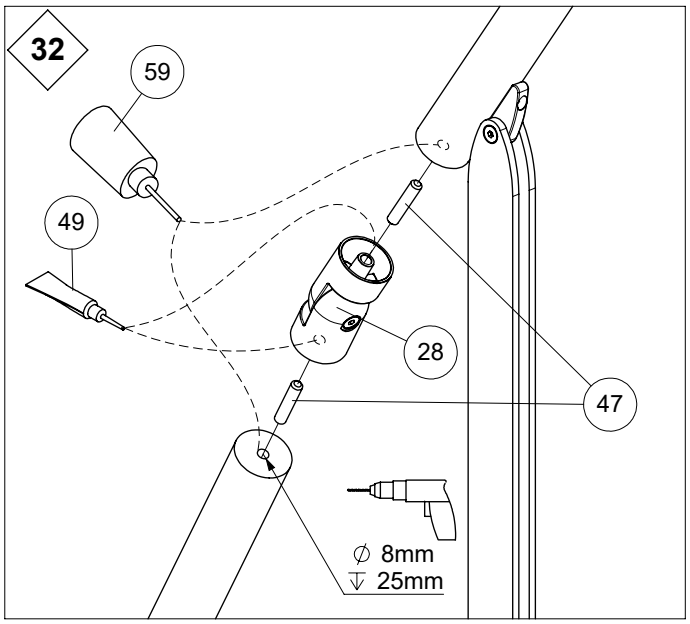
32
59
49
28
47
∅ 8mm
↧ 25mm

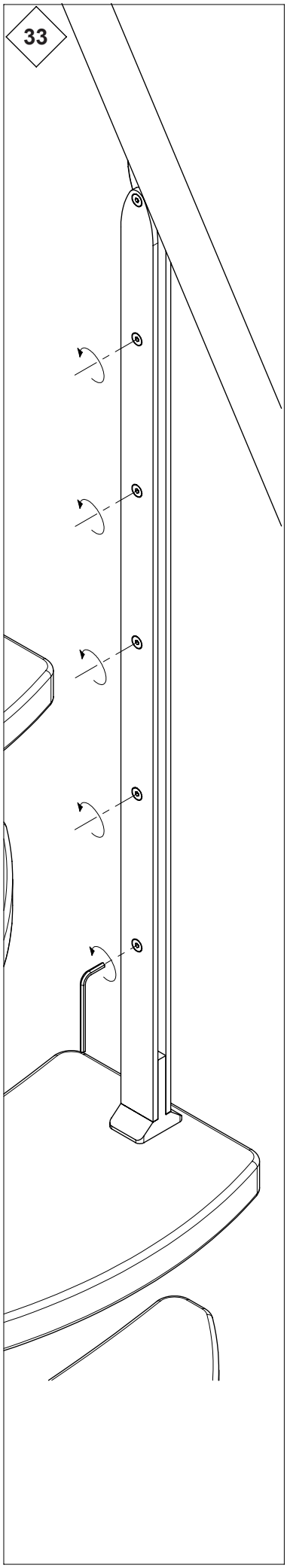
33

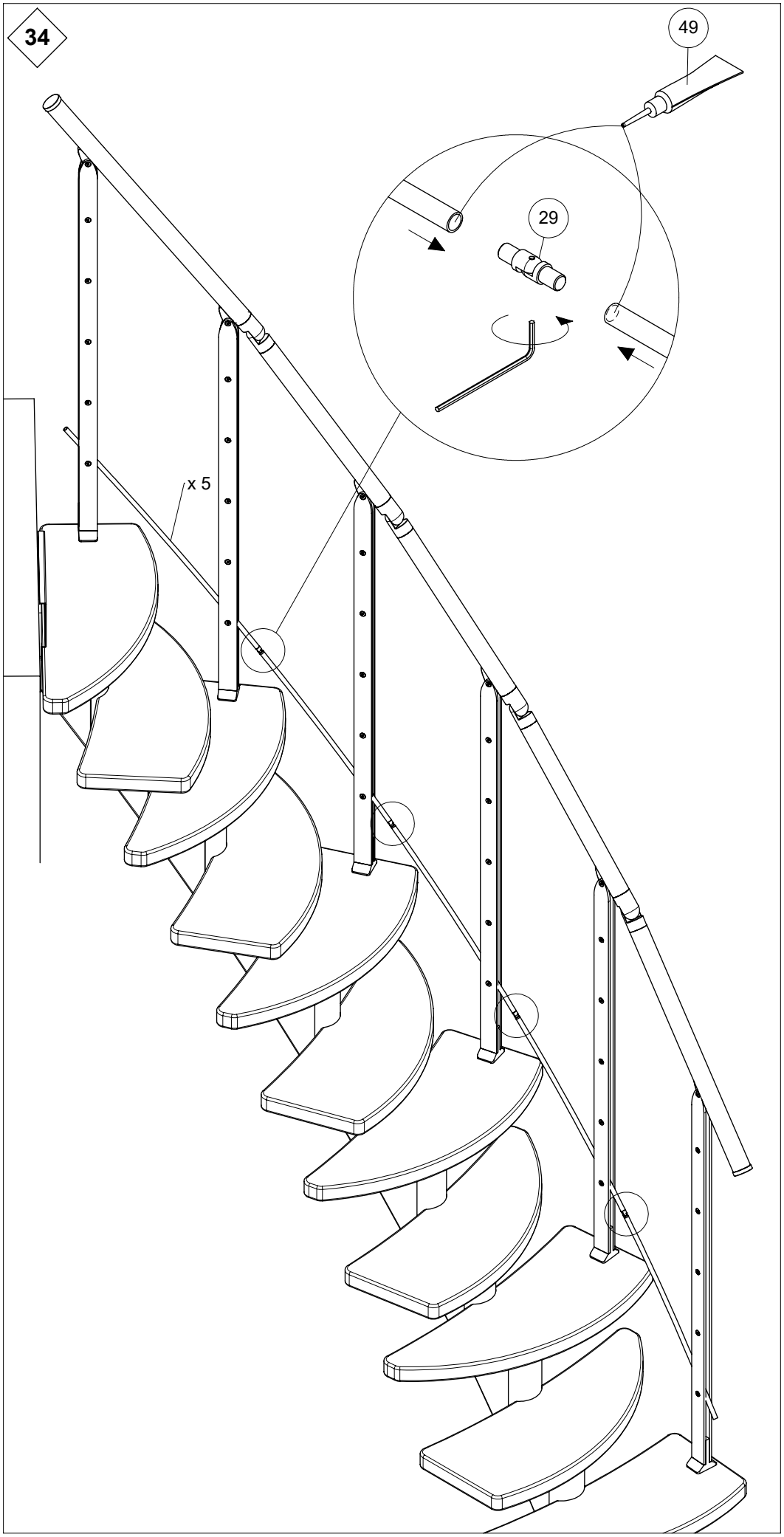
34
49
29
x 5

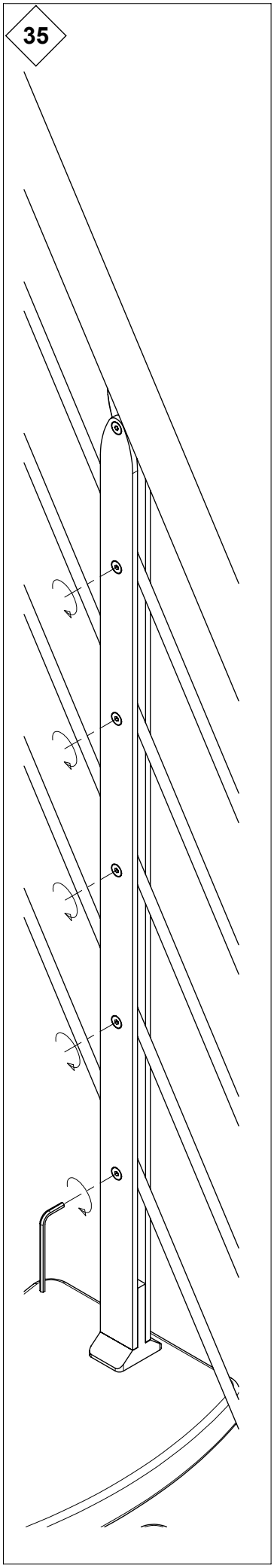
35

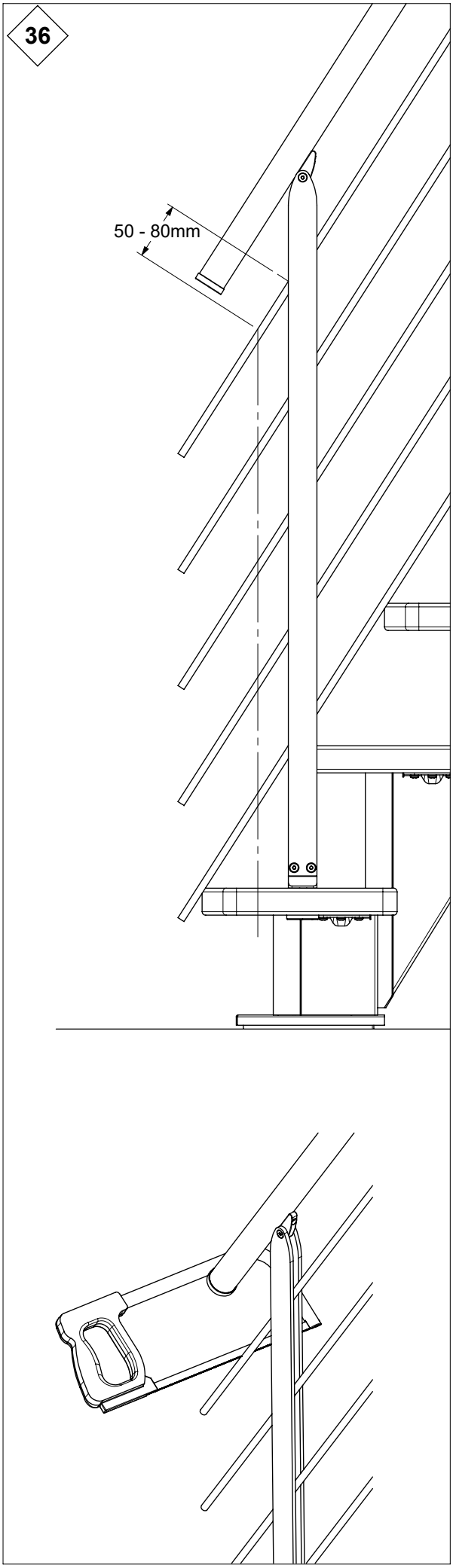
36
50 - 80mm

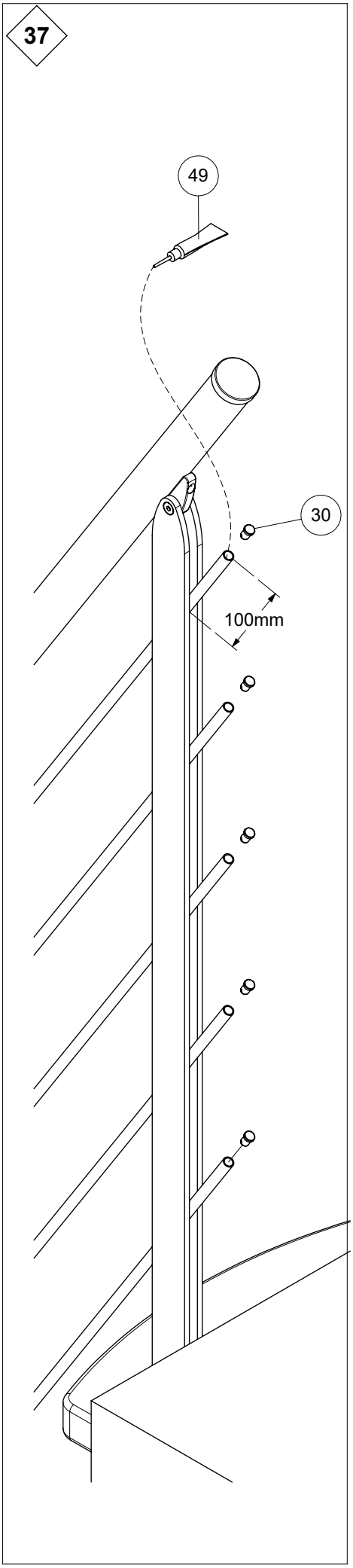
37
49
30
100mm