DOLLE

KIEL

Montageanleitung
Assembly instruction

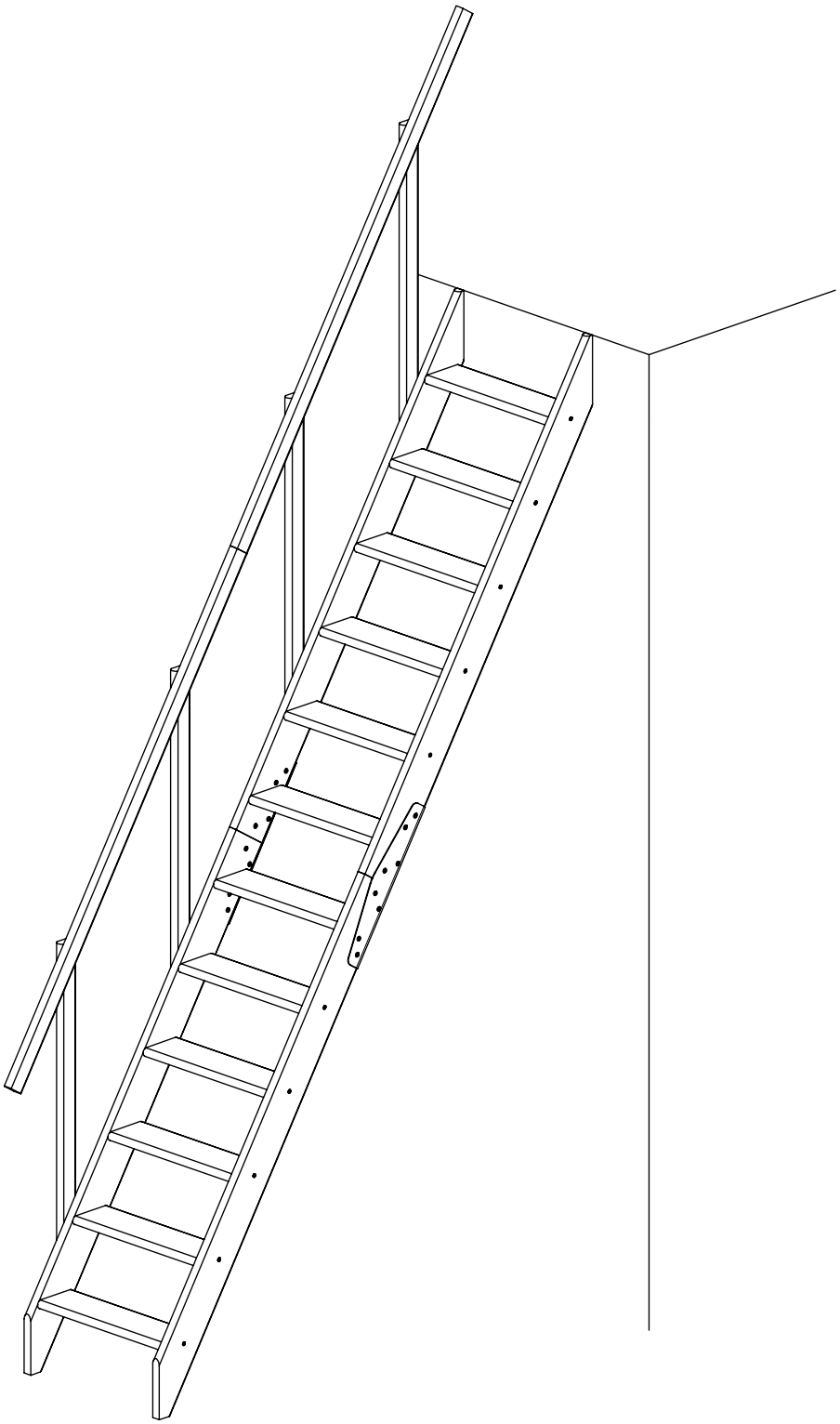

R3-20095 / 18-11-2016

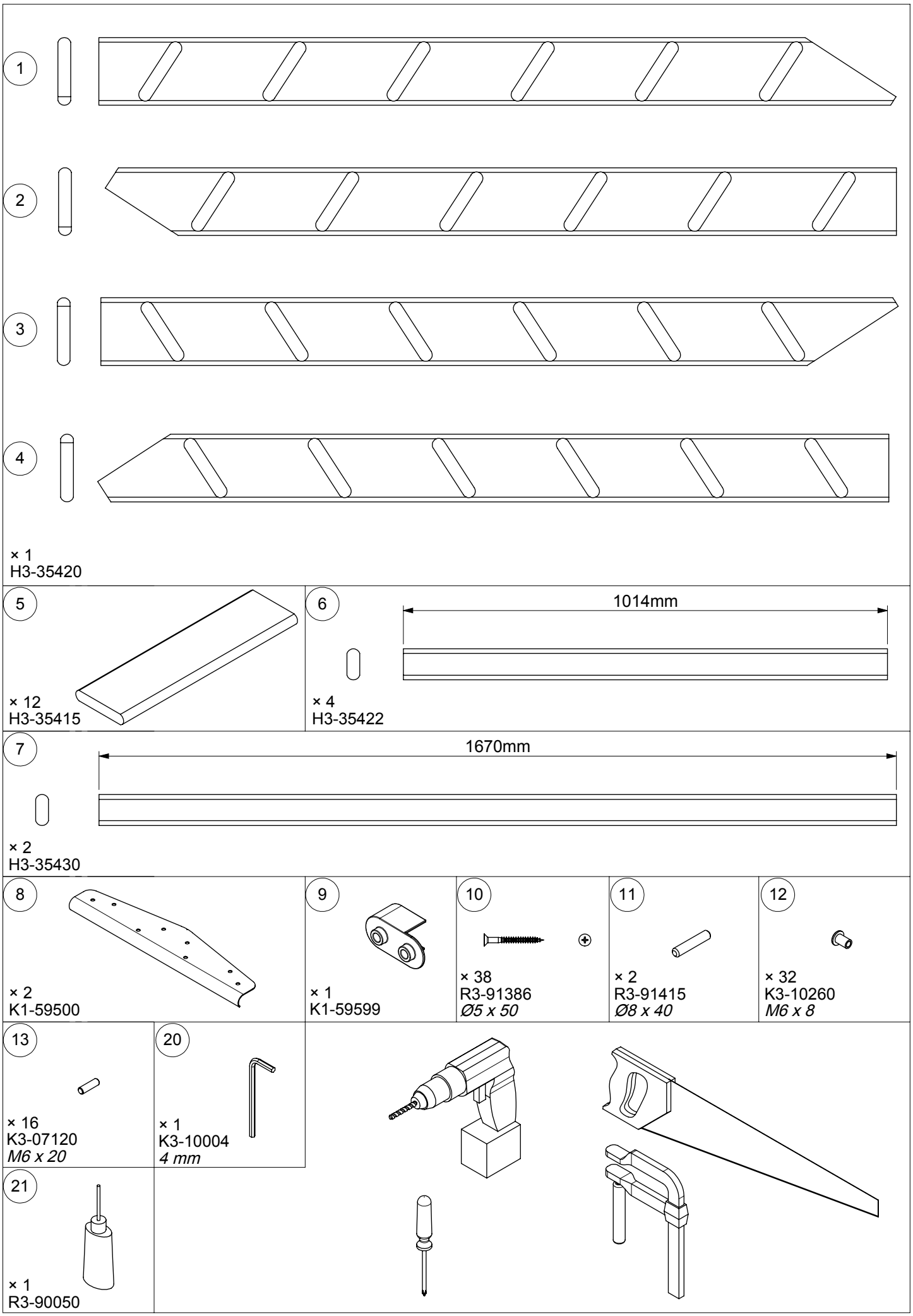
1
2
3
4
× 1
H3-35420
5
× 12
H3-35415
6
1014mm
× 4
H3-35422
7
1670mm
× 2
H3-35430
8
× 2
K1-59500
9
× 1
K1-59599
10
× 38
R3-91386
Ø5 x 50
11
× 2
R3-91415
Ø8 x 40
12
× 32
K3-10260
M6 x 8
13
× 16
K3-07120
M6 x 20
20
× 1
K3-10004
4 mm
21
× 1
R3-90050

1a

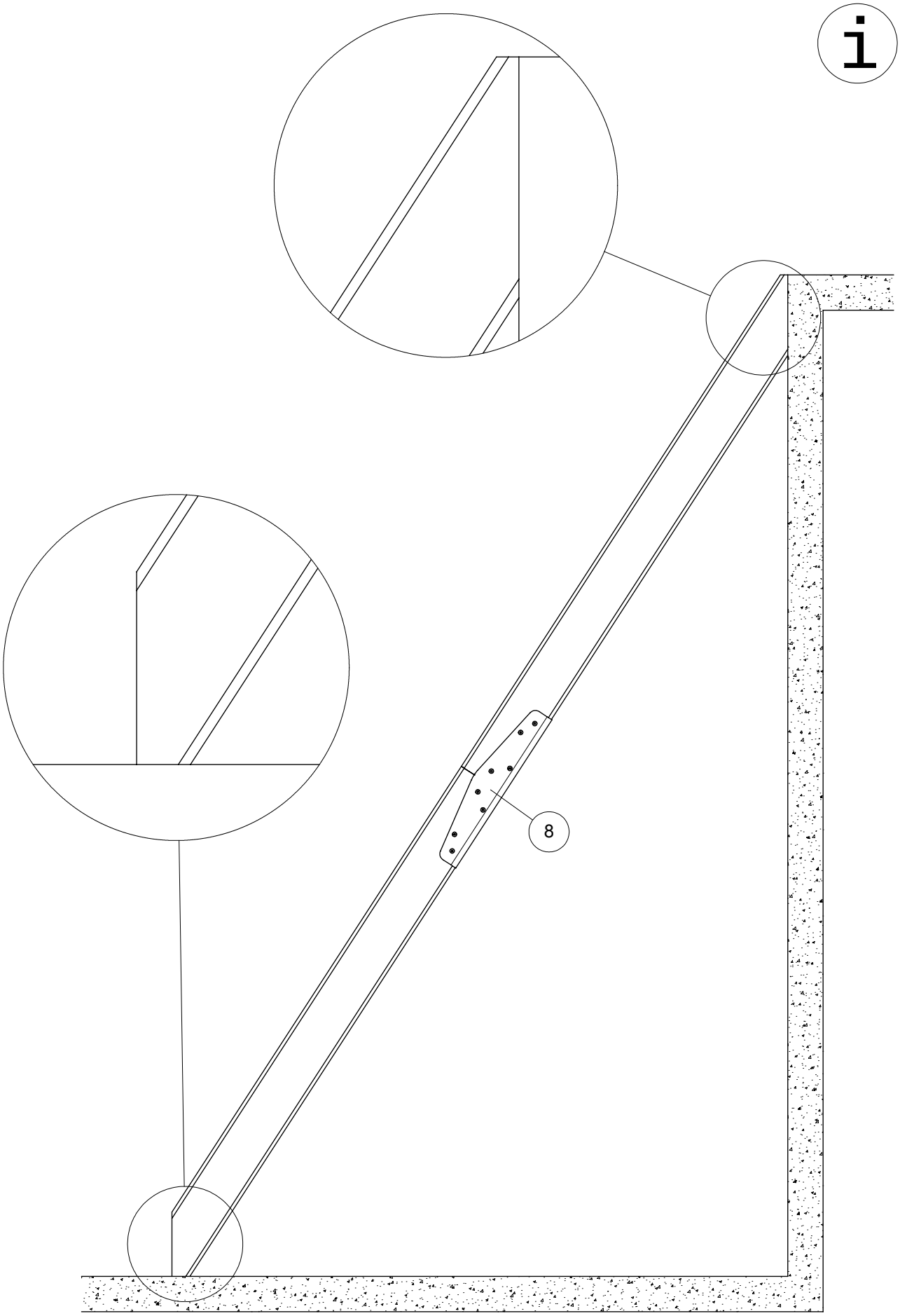

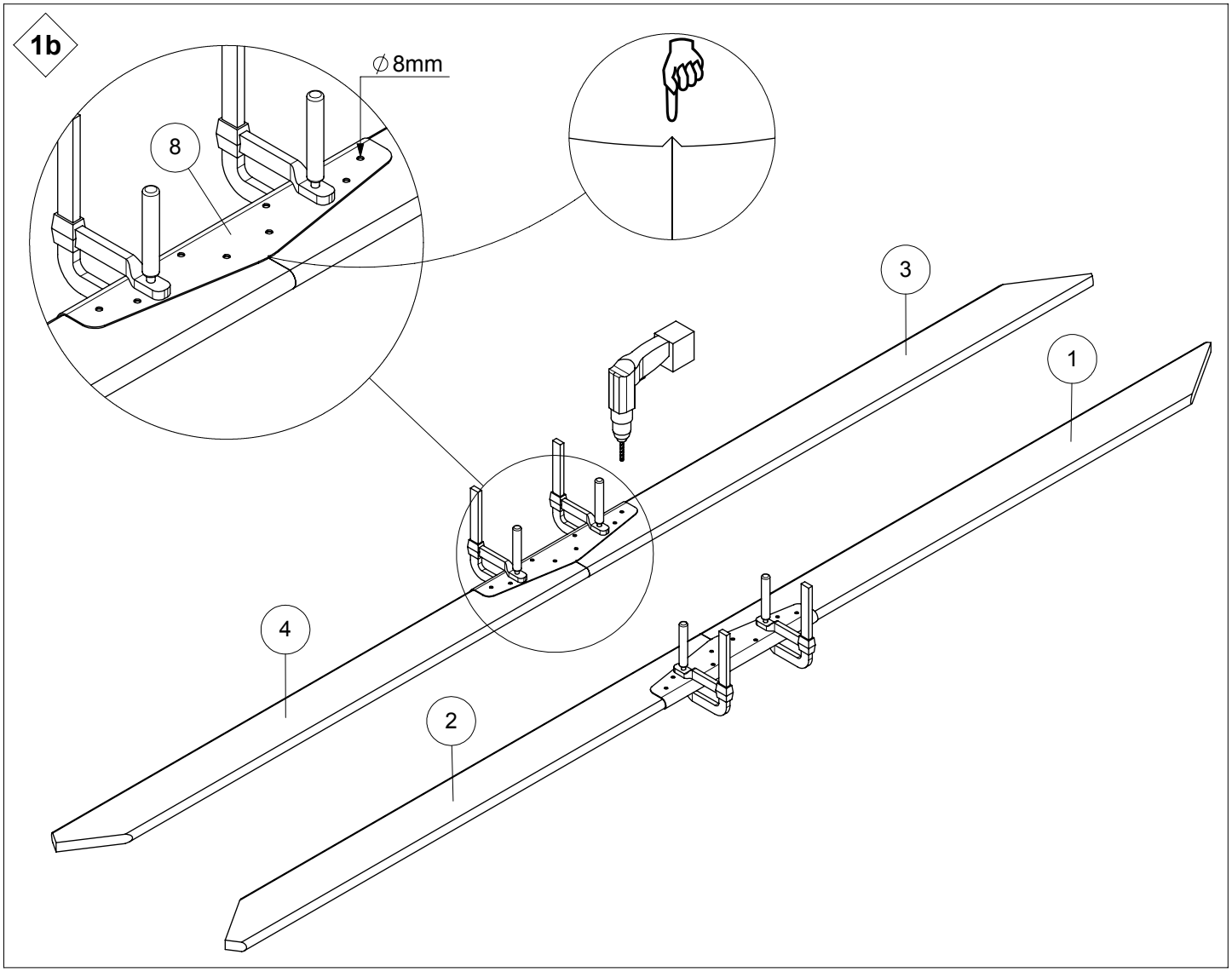
1b
∅8mm
8
3
1
4
2

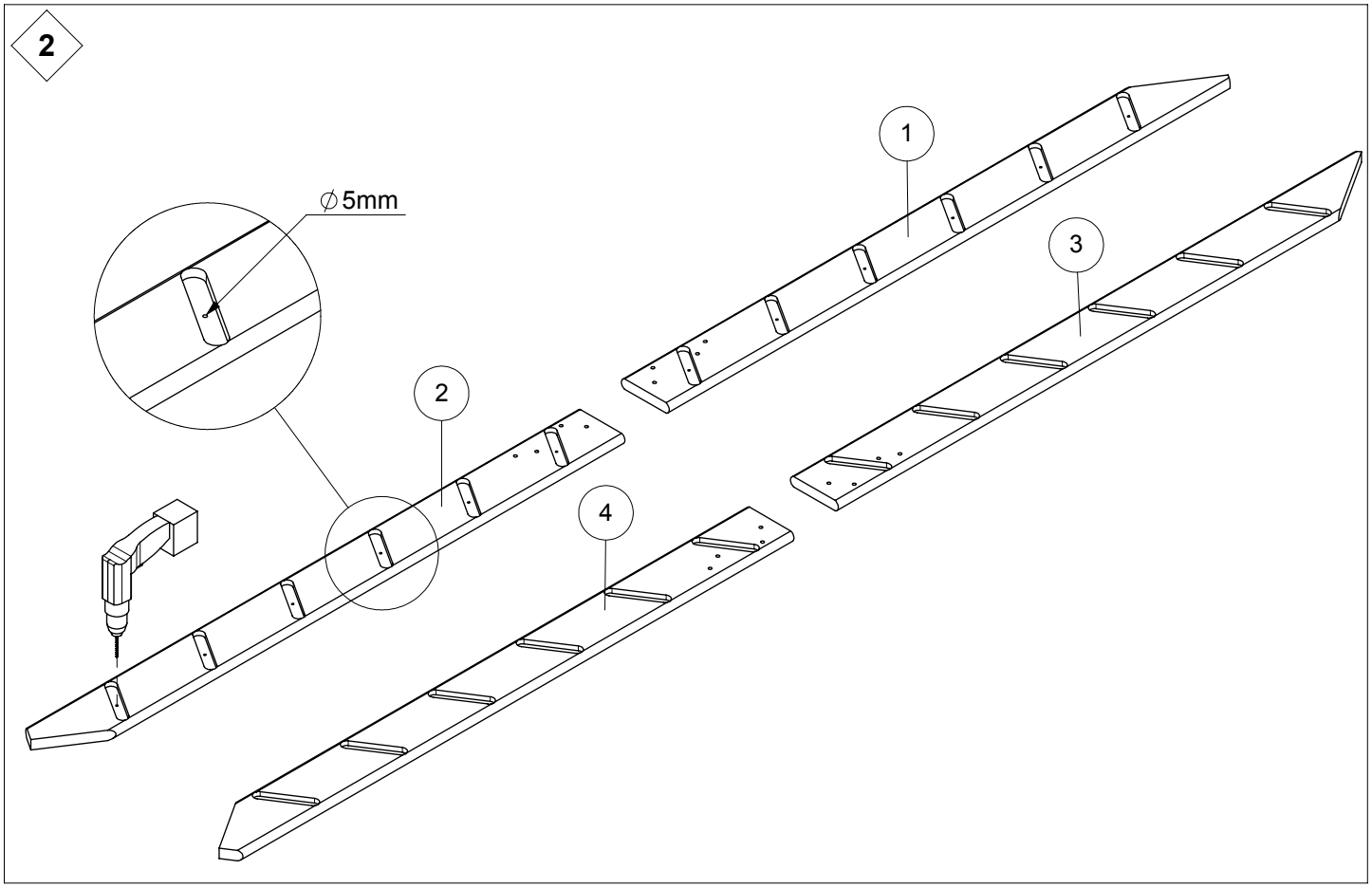
2
∅5mm
1
3
2
4

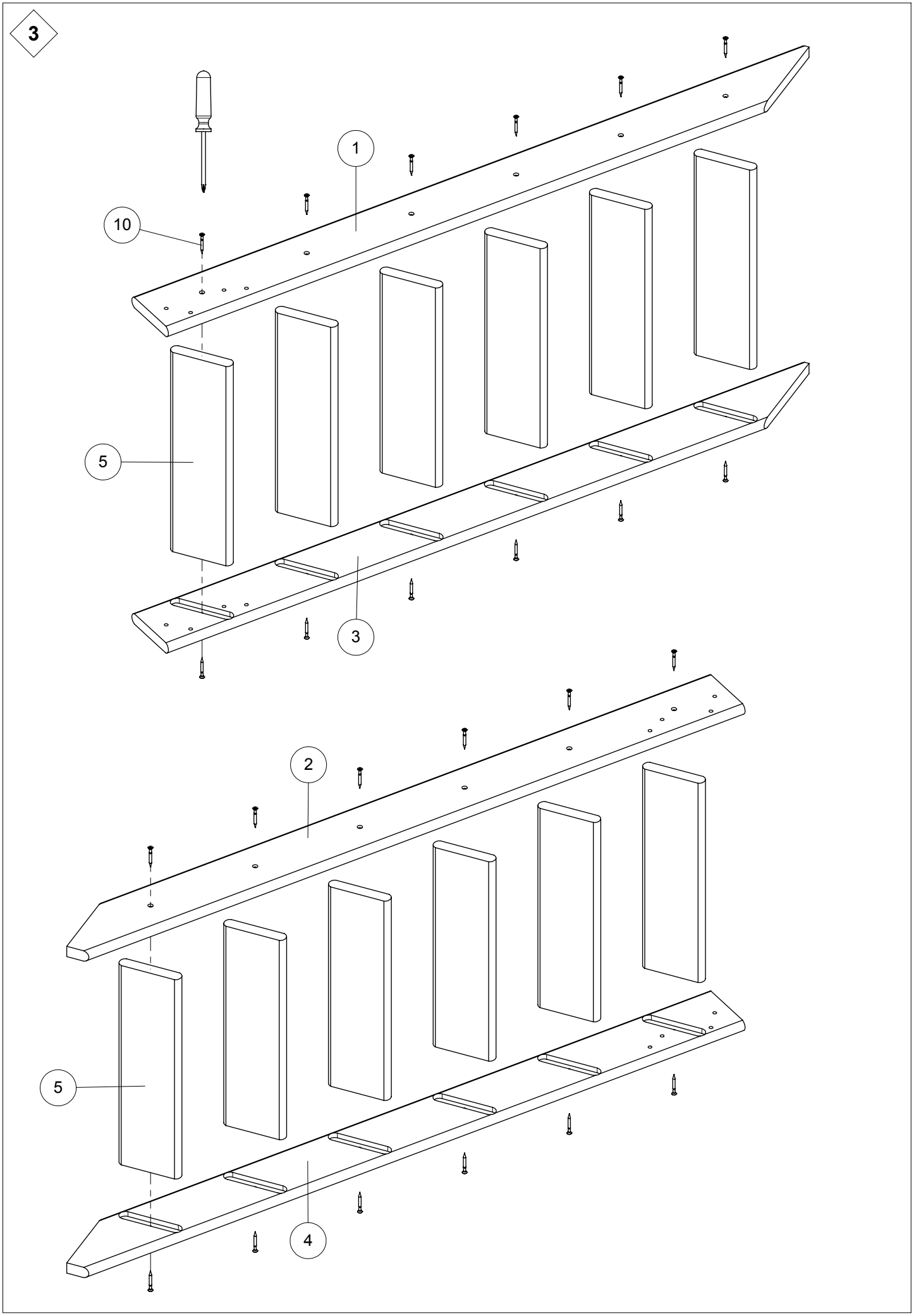
3
1
10
5
3
2
5
4

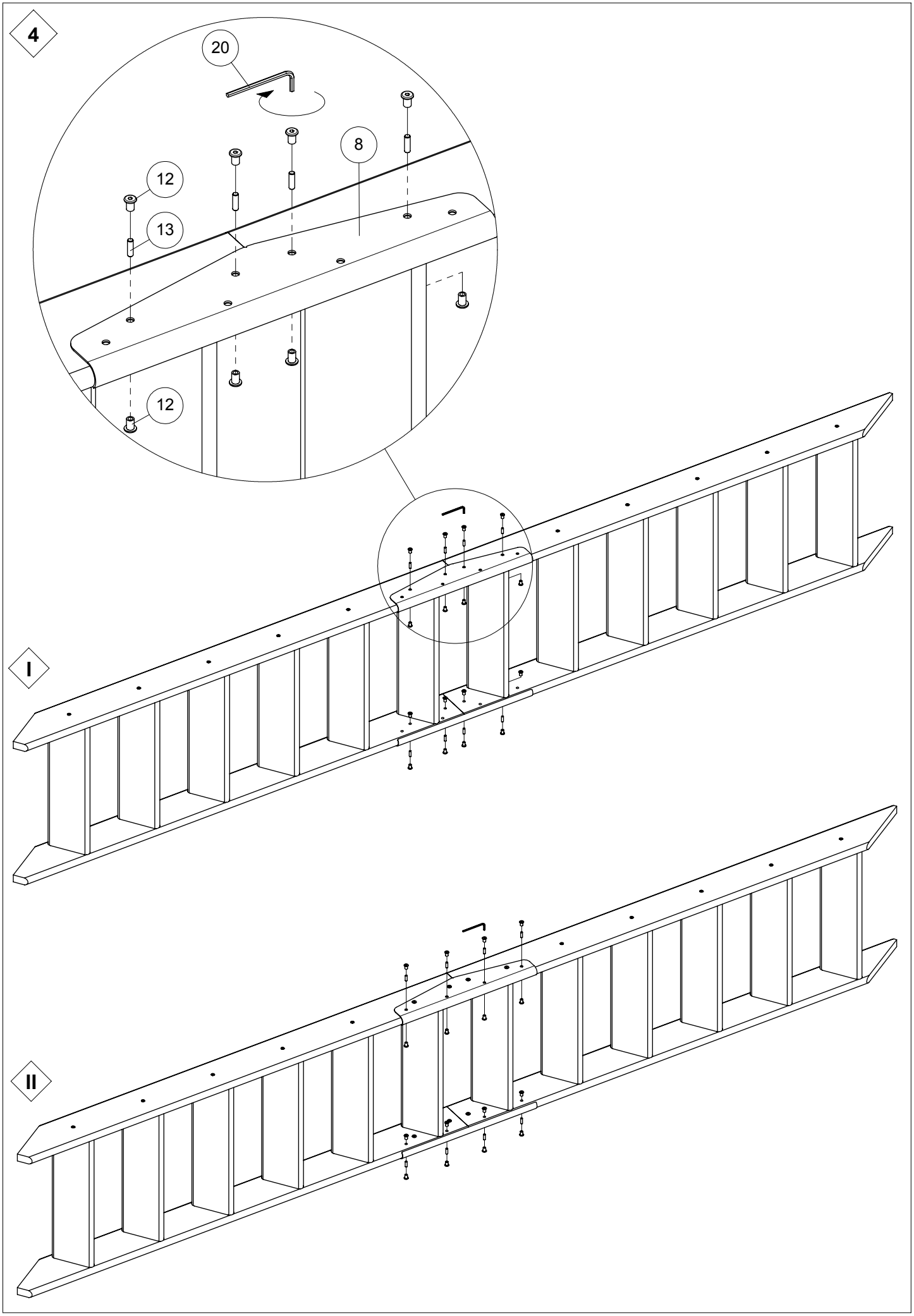
4
20
8
12
13
12
I
II

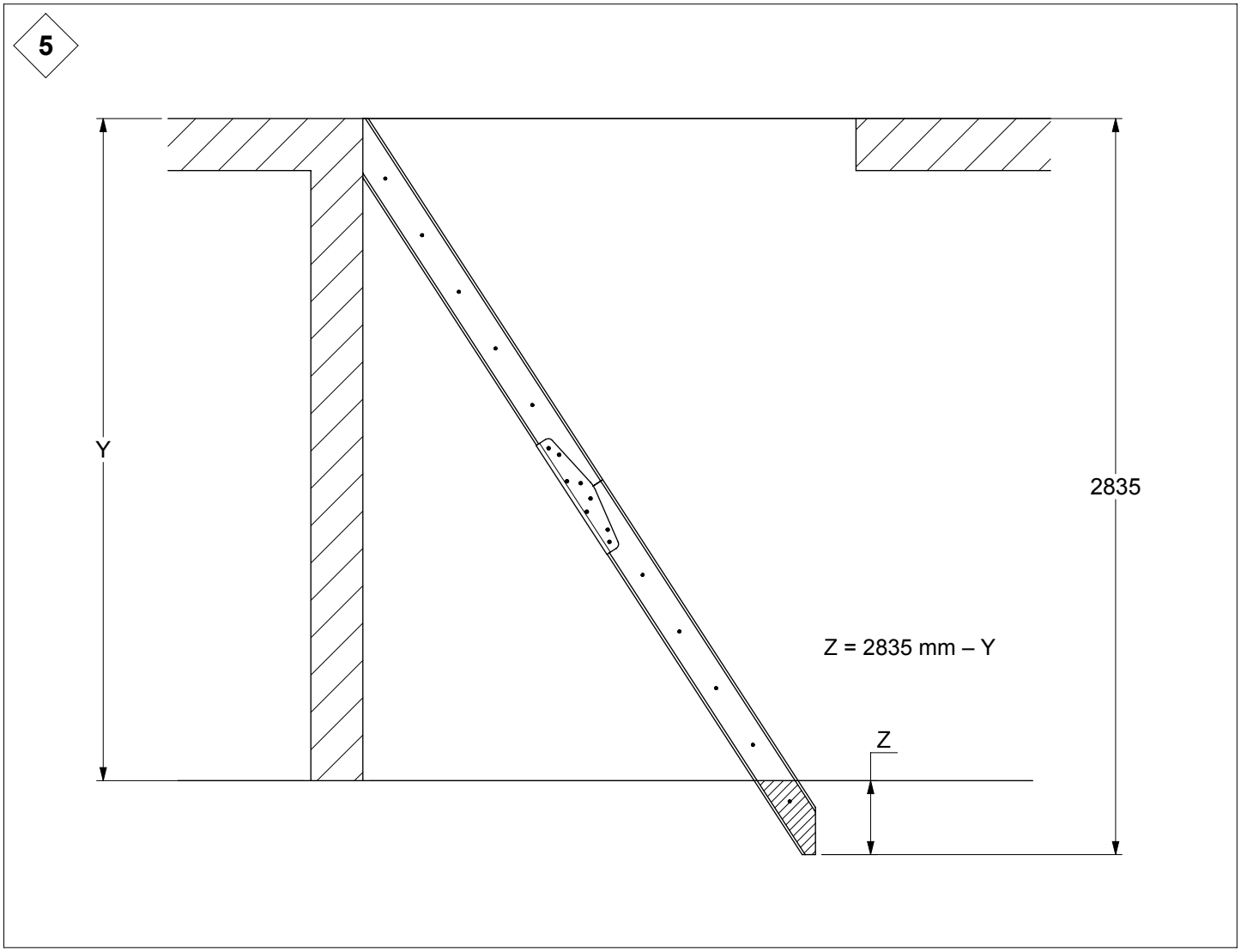
5
Y
2835
Z = 2835 mm – Y
Z

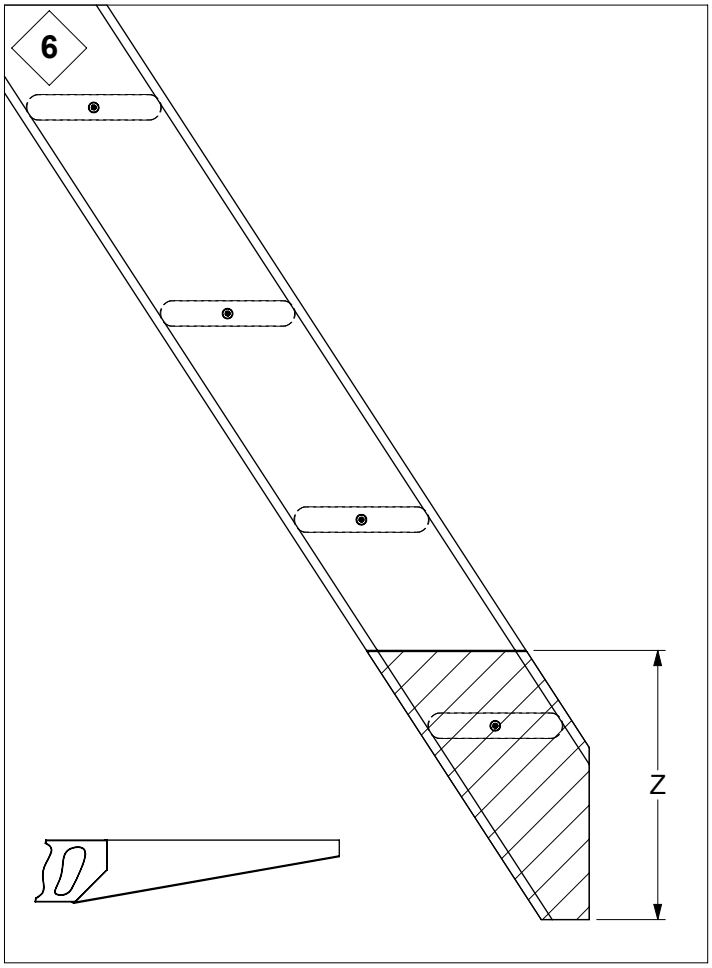
6
Z

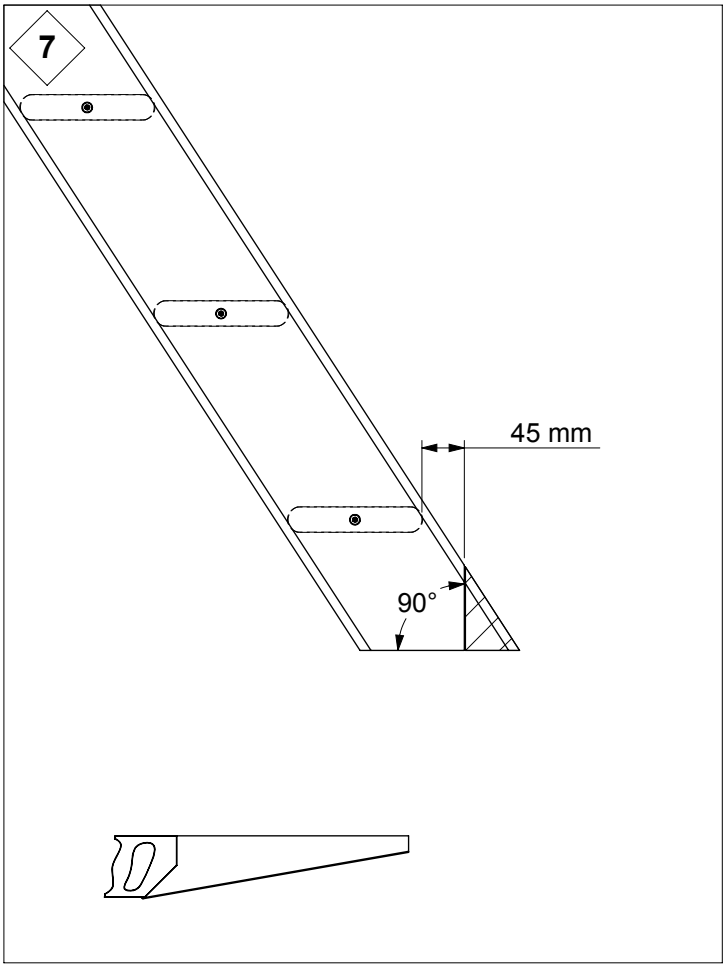
7
45 mm
90°

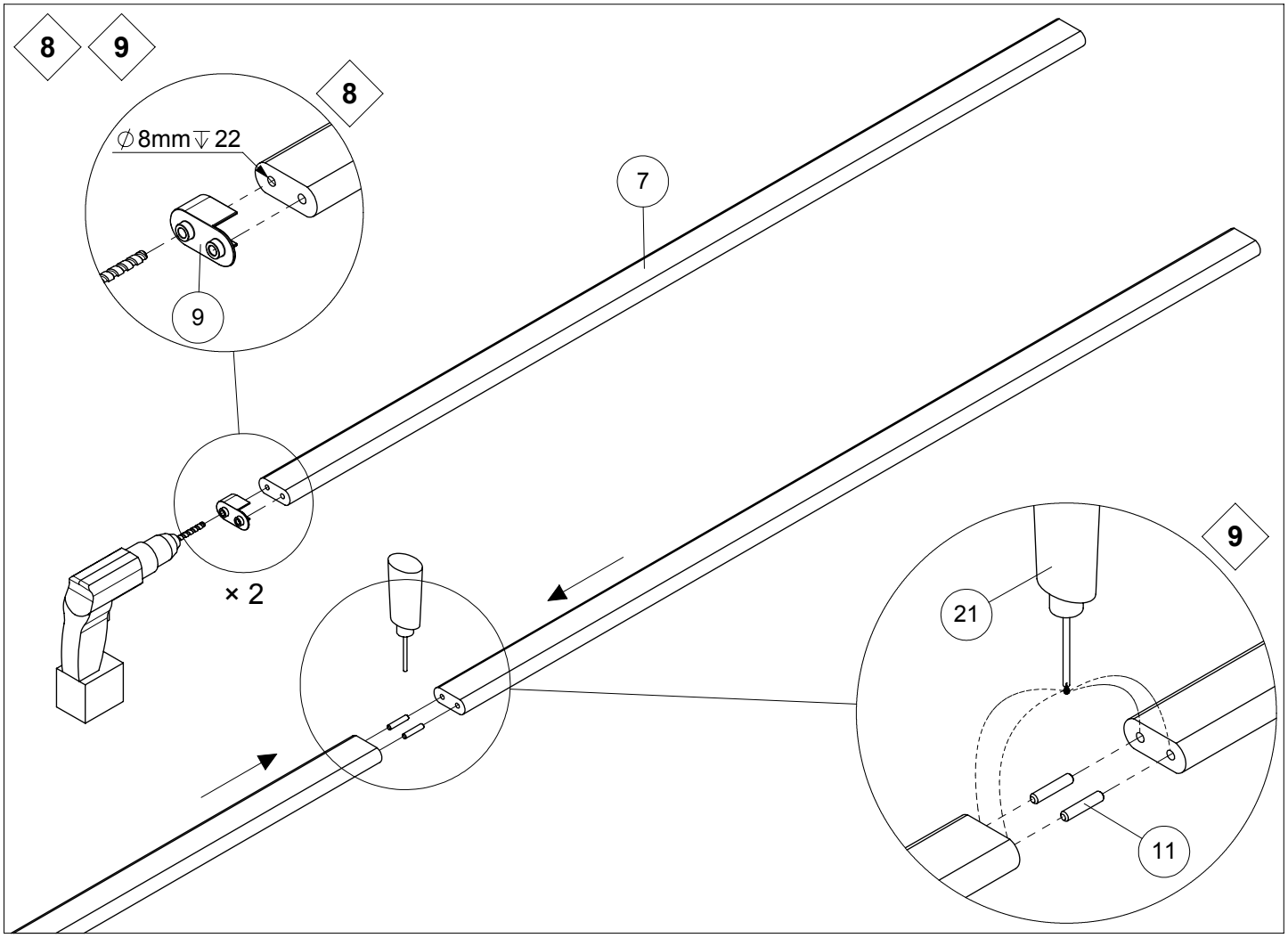
8
9
8
∅8mm↧22
7
9
× 2
9
21
11

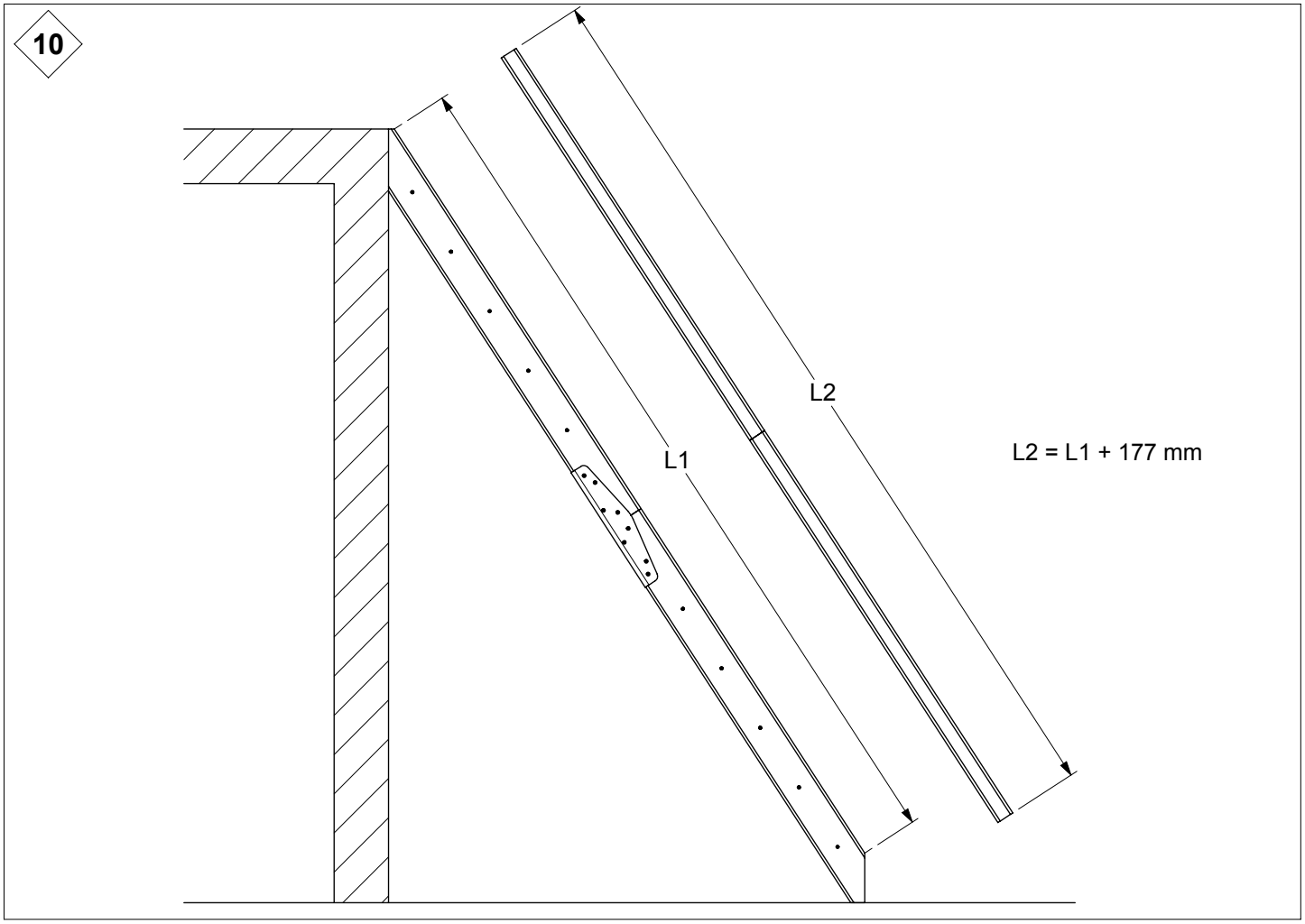
10
L2
L1
L2 = L1 + 177 mm

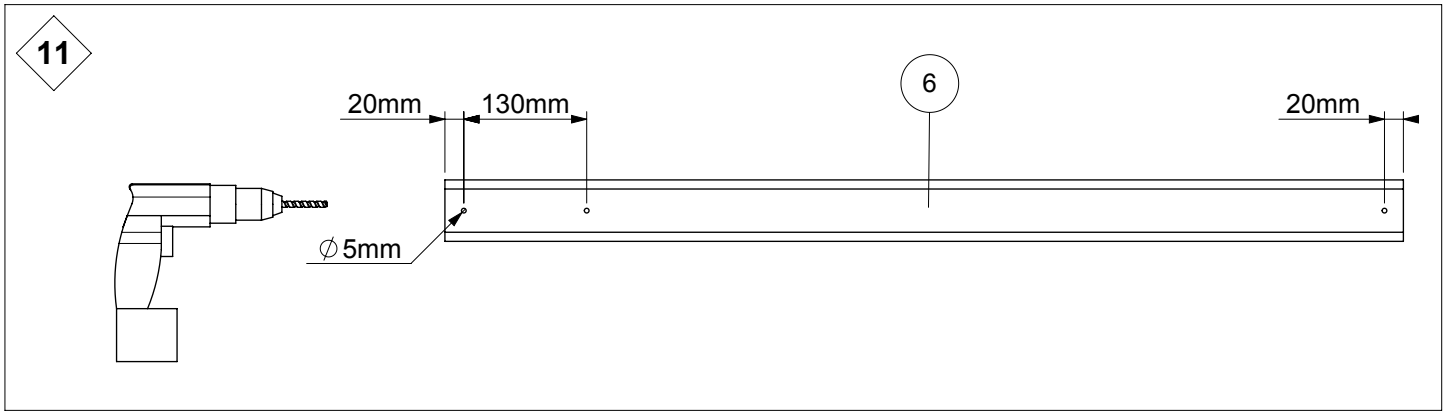
11
20mm
130mm
6
20mm
∅5mm

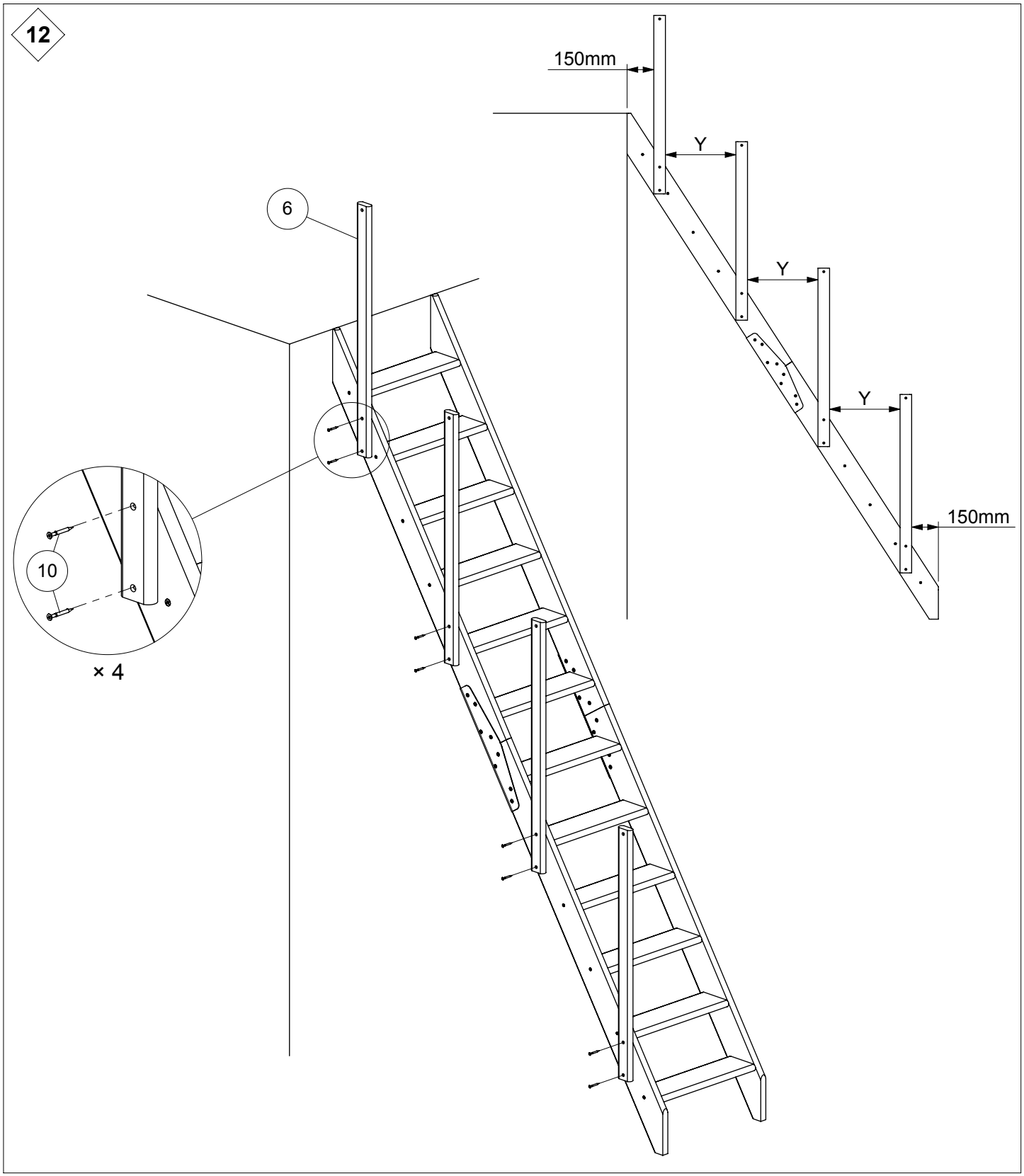
12
150mm
Y
Y
Y
150mm
6
10
× 4
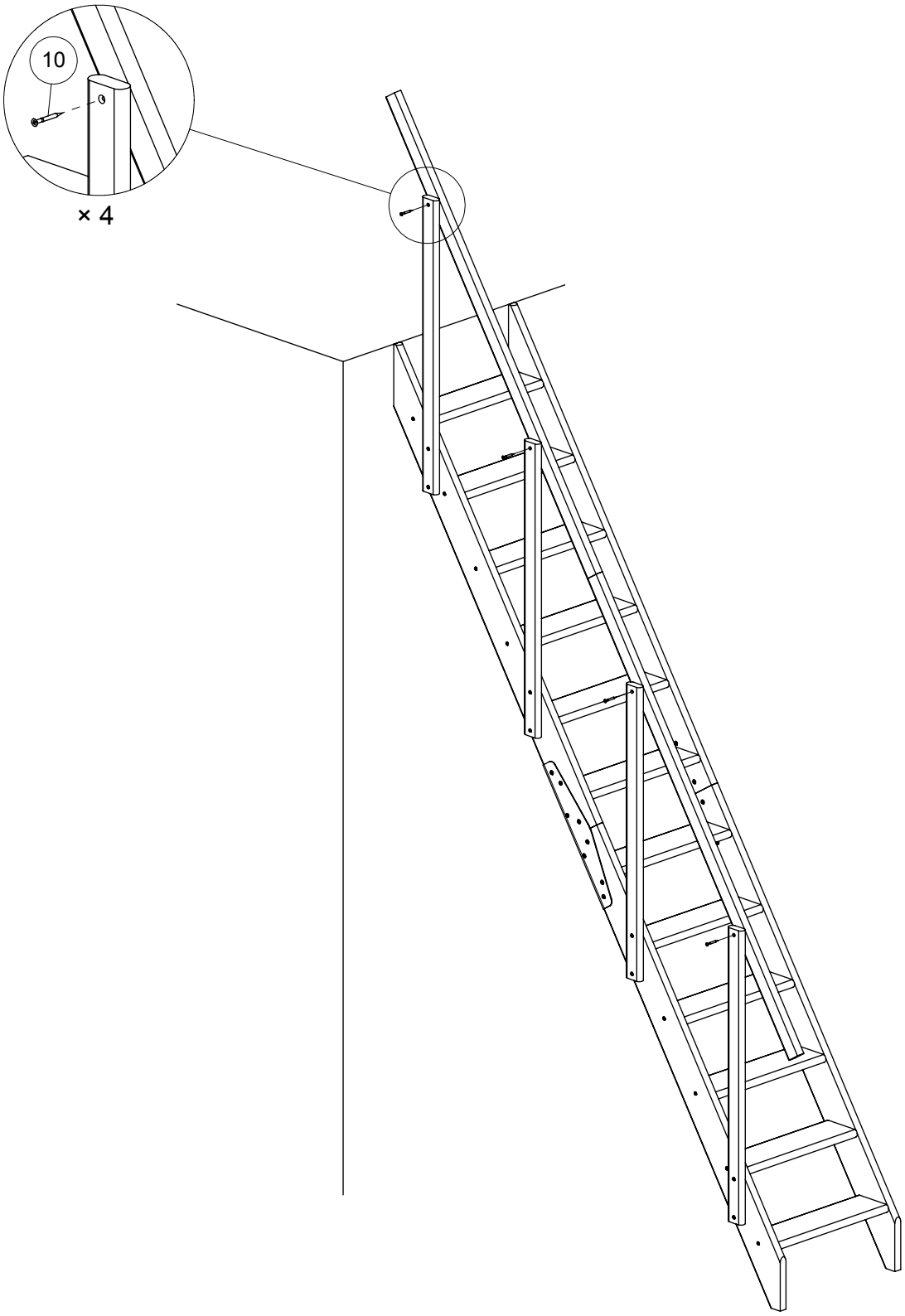
13