HI15F

1,5 m

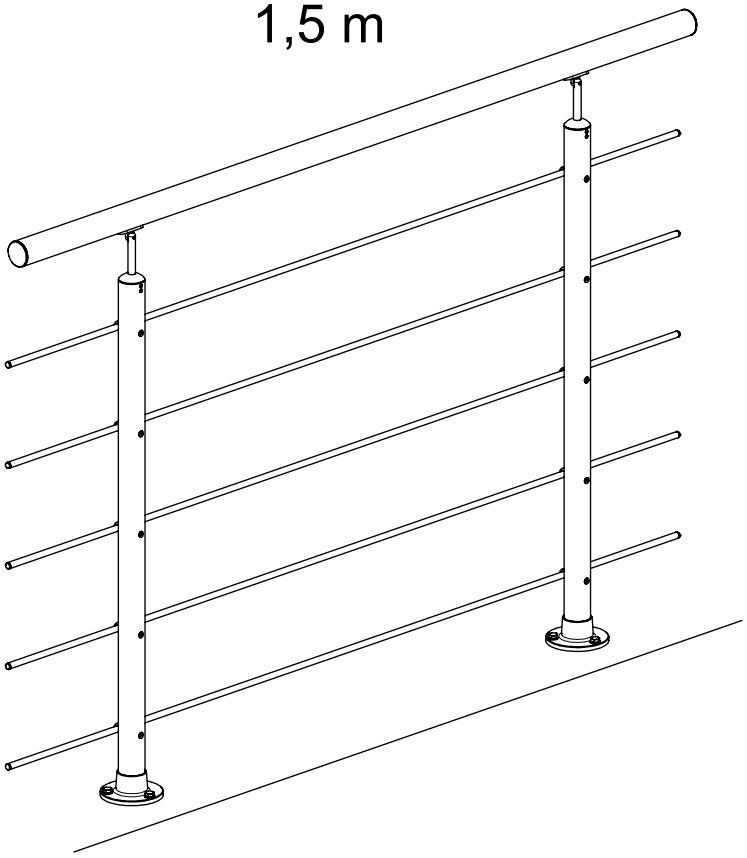

HIC

OPTION

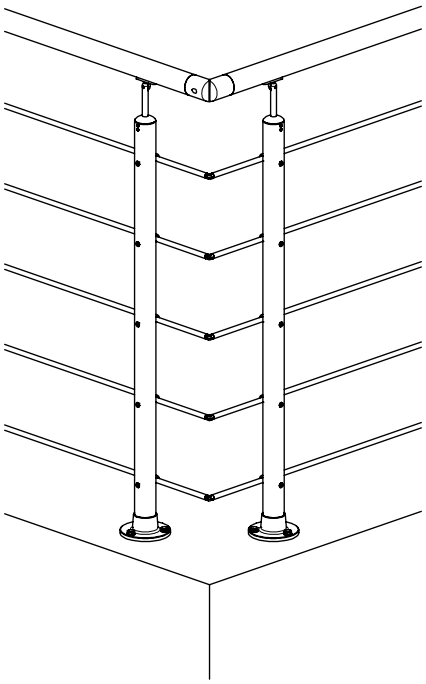

PA13 + A25

OPTION

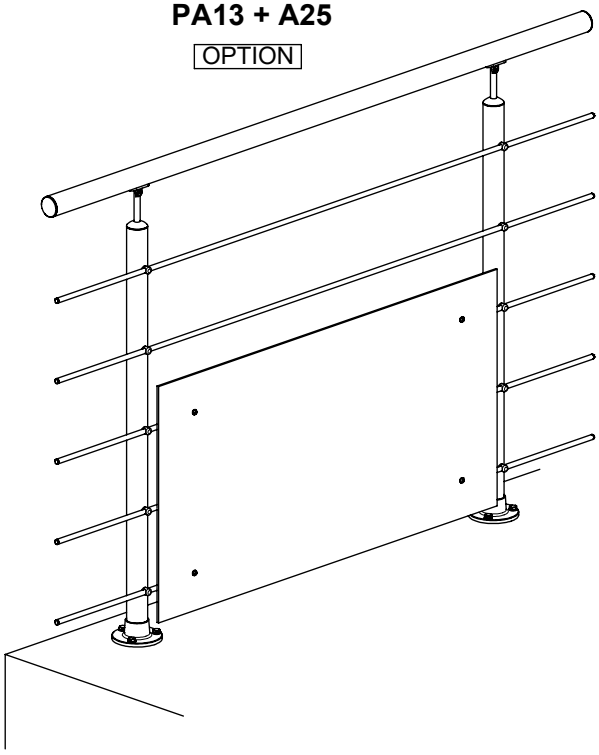

HI15F

1

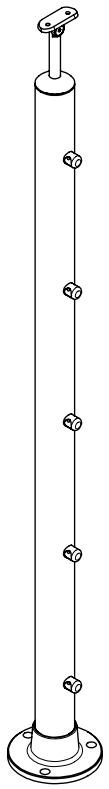

x 2
K2-1085910

4

x 2
K1-35311

6

x 4
K3-02042
M4 x 12

7

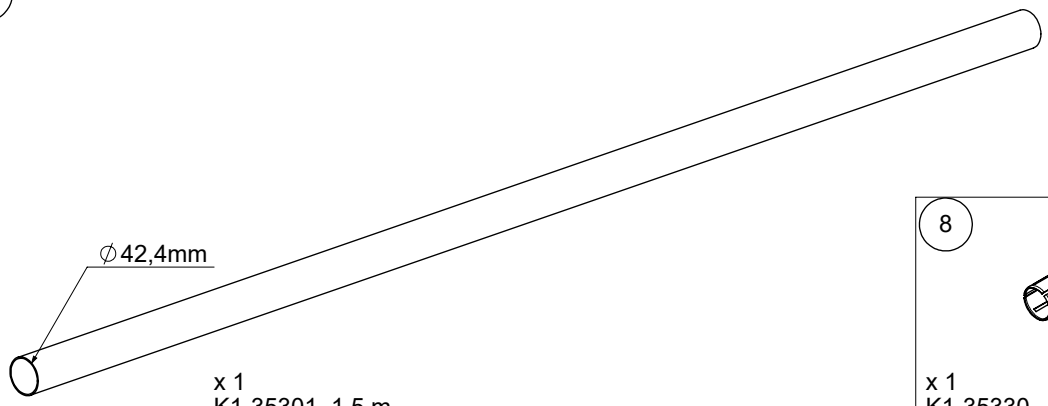

x 1
K1-35301 1,5 m

8

x 1
K1-35330

9

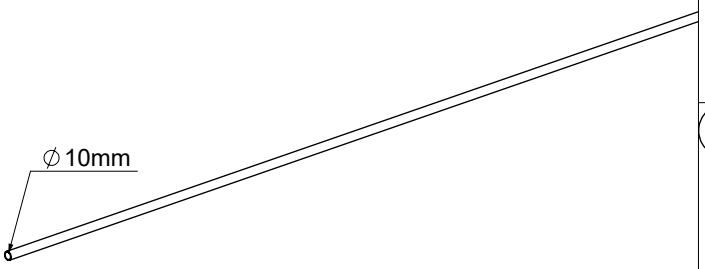

x 5
K1-18049 1,5 m

10

x 5
K1-1092201

11

x 10
K1-18099

12

x 1
K3-10014
M4

13

x 1
K3-90001

HIC

OPTION

8

x 2
K1-35330

13

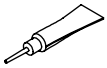

x 1
K3-90001

20

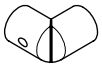

x 1
K2-35340

21

x 5
K2-35426

HI13

OPTION

30

x 4
K1-1085998

31

x 8
K1-36047

32

x 4
K3-02266
M6 x 12

A25

OPTION

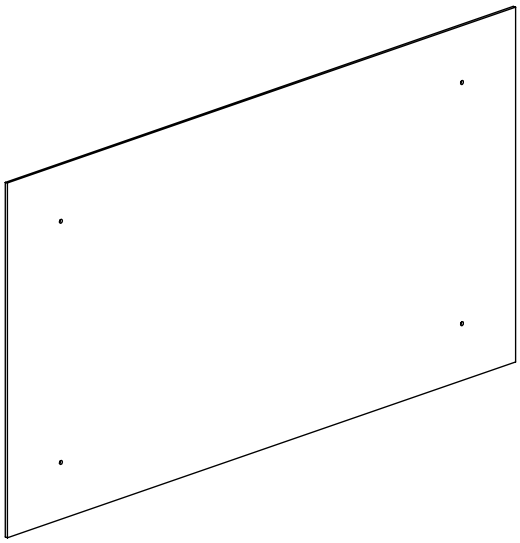

Verre acrylique
Ackrylglas
Vidrio acrílico

1

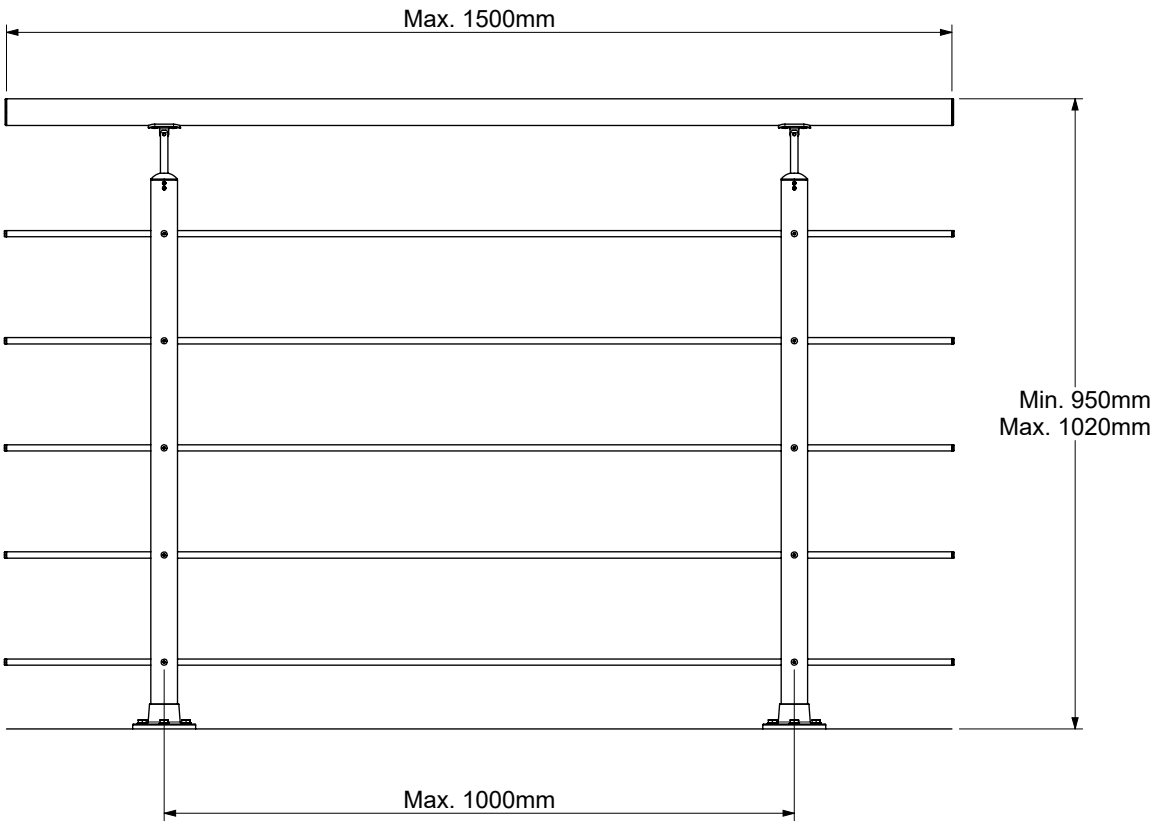

2

Alt
A

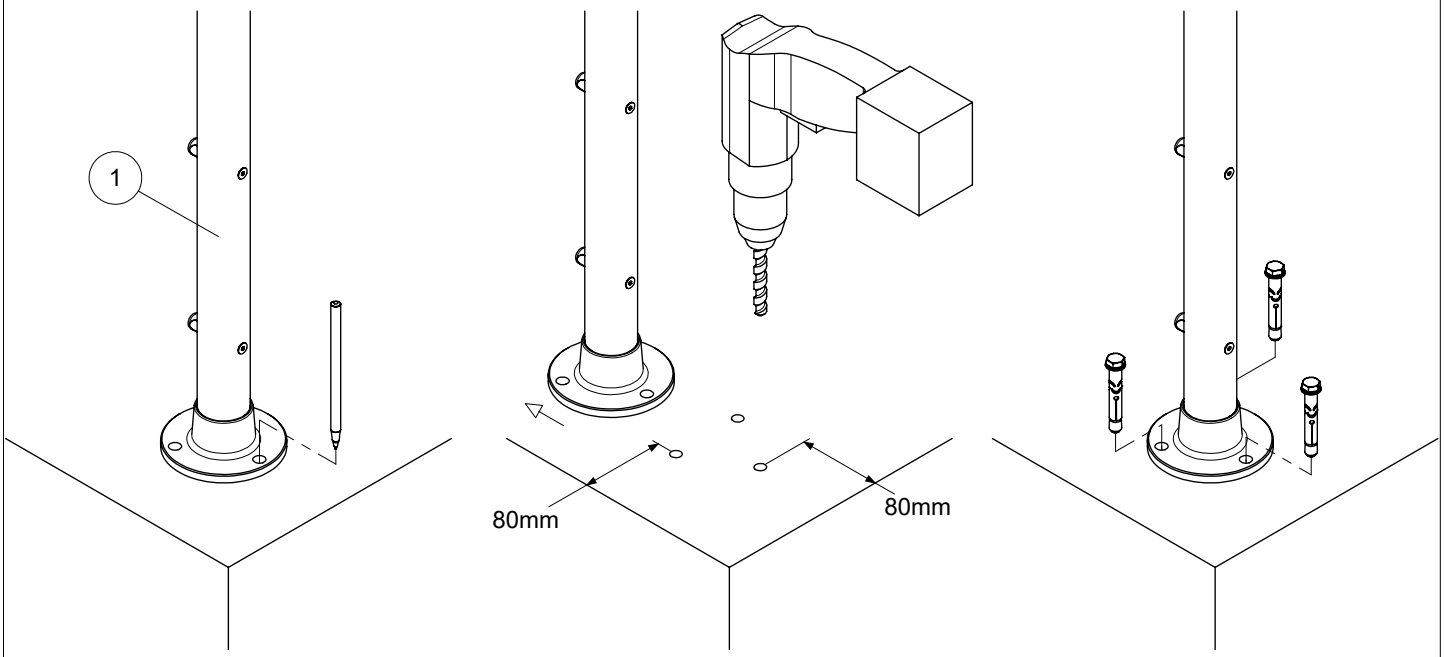

2

Alt
B

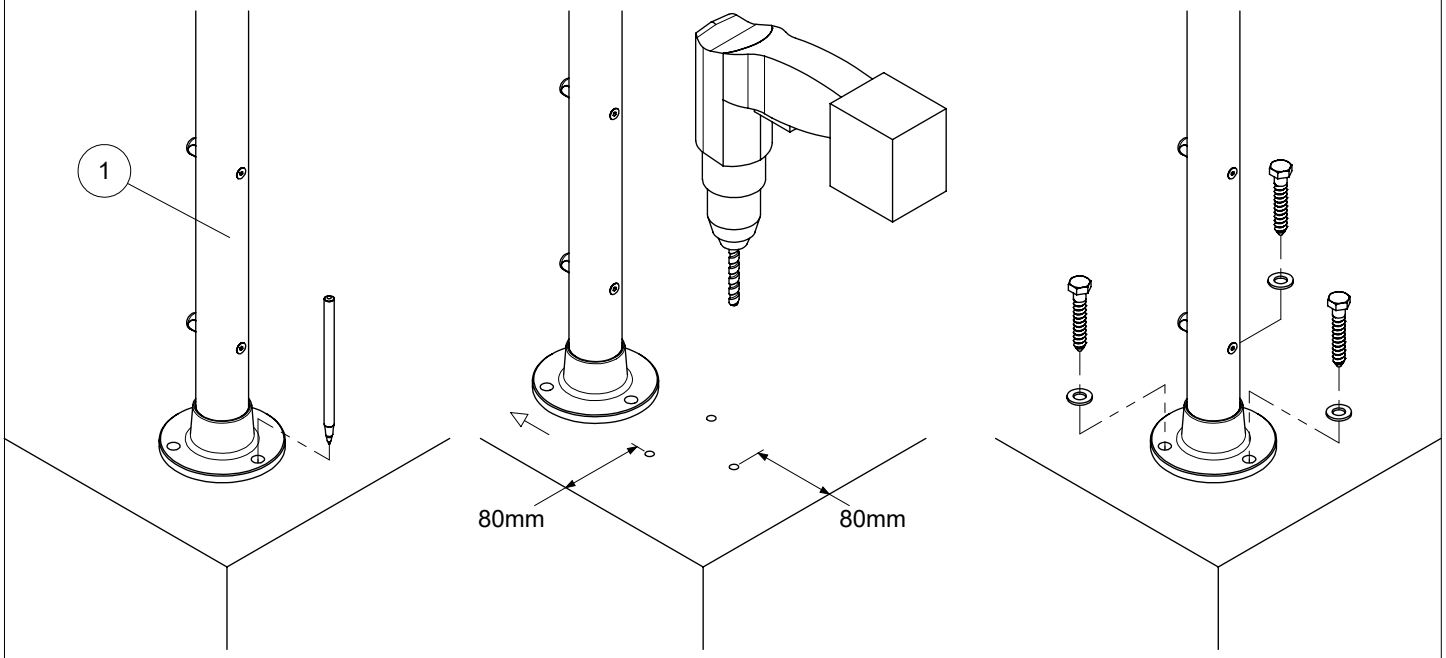

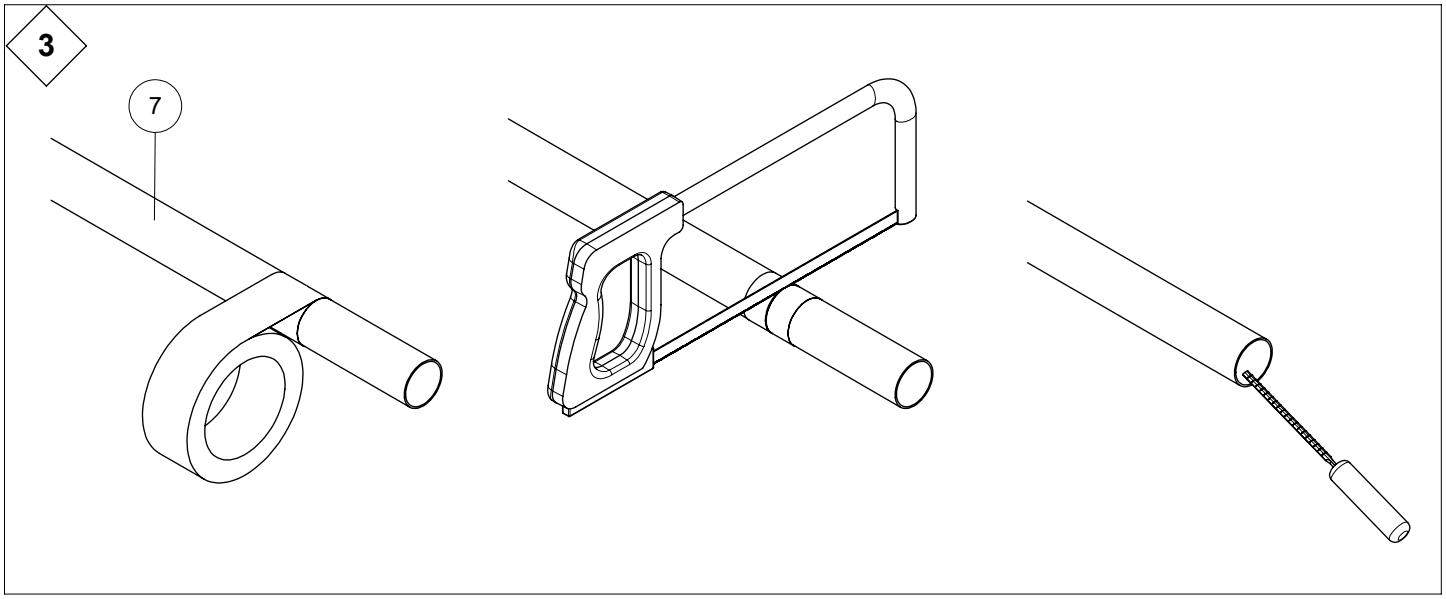
3
7

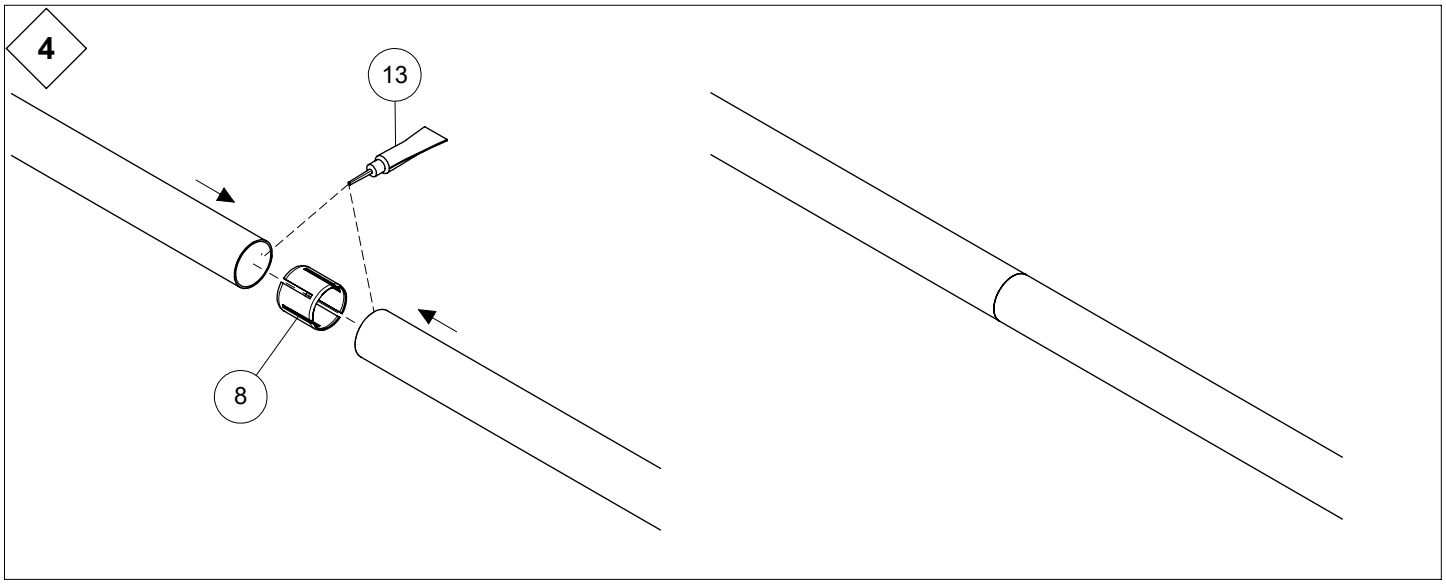
4
13
8

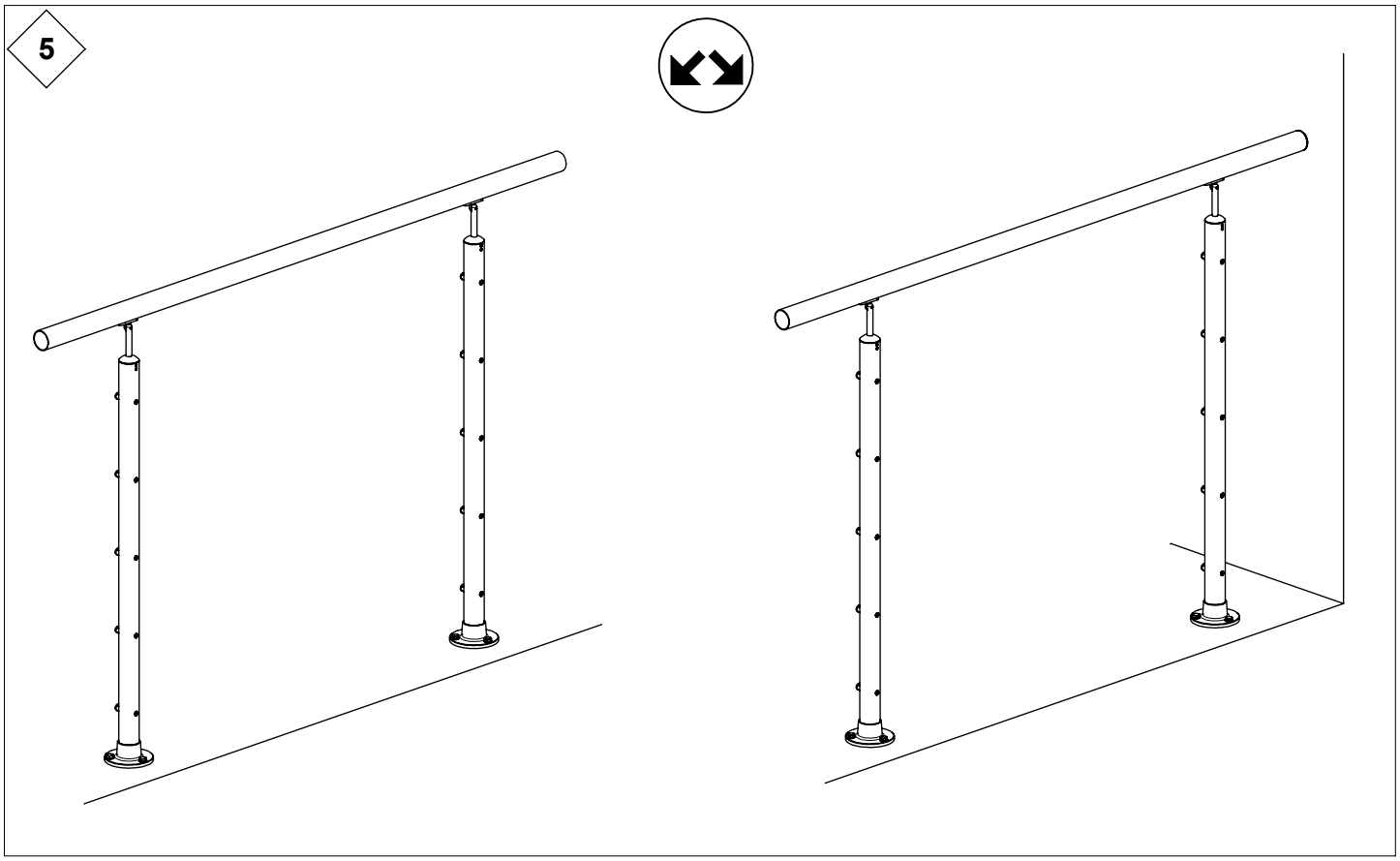
5

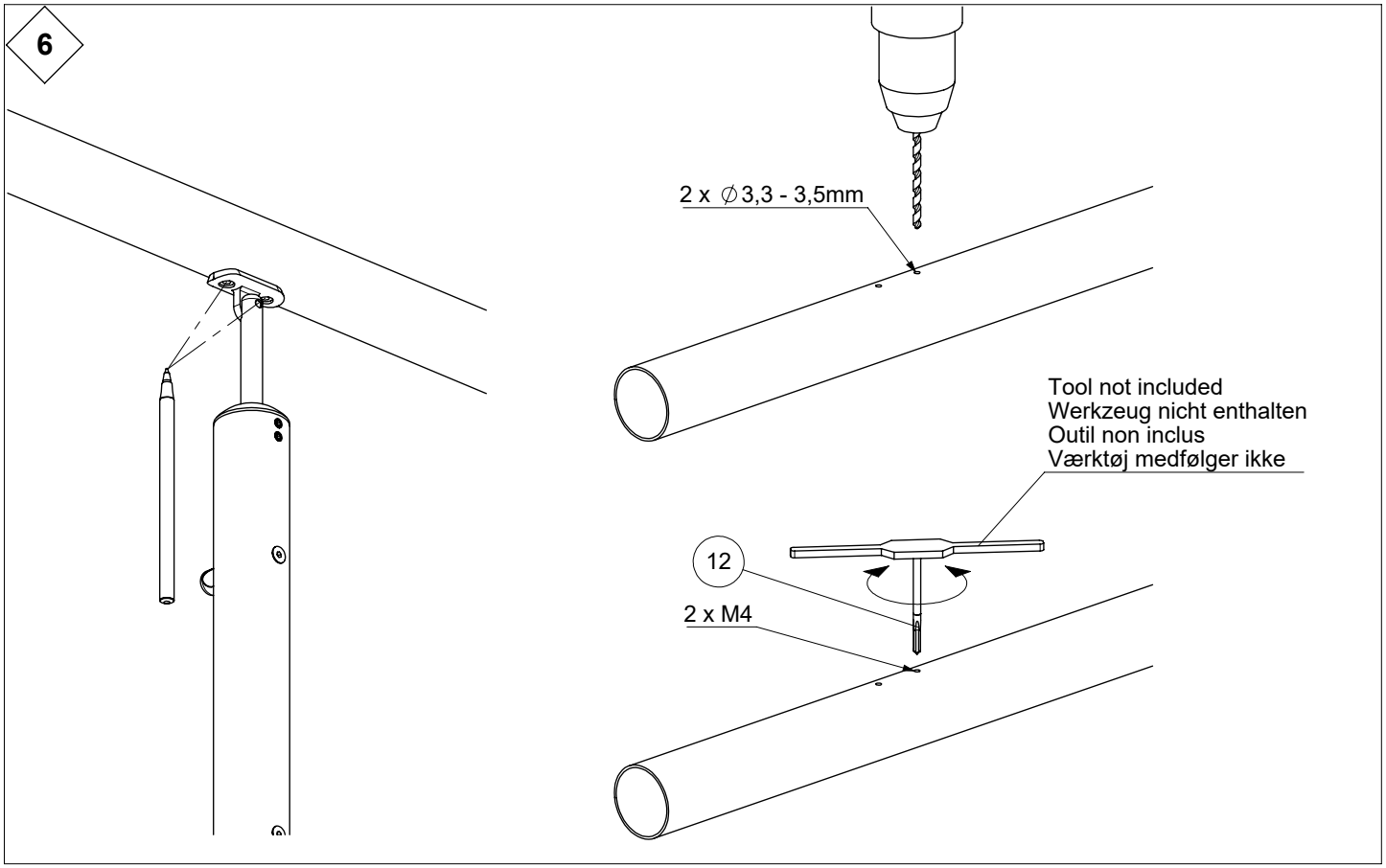
6
2 x ∅3,3 - 3,5mm
Tool not included
Werkzeug nicht enthalten
Outil non inclus
Værktøj medfølger ikke
12
2 x M4

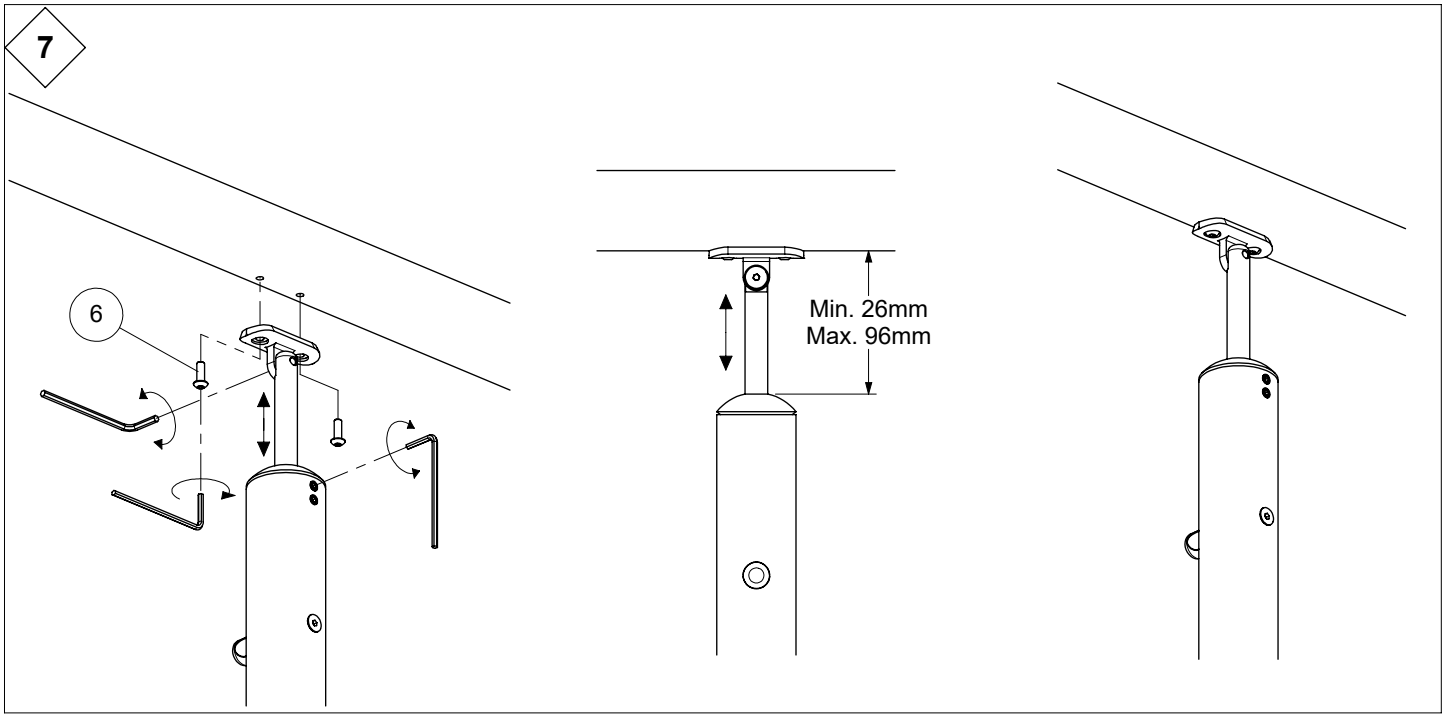
7
6
Min. 26mm
Max. 96mm

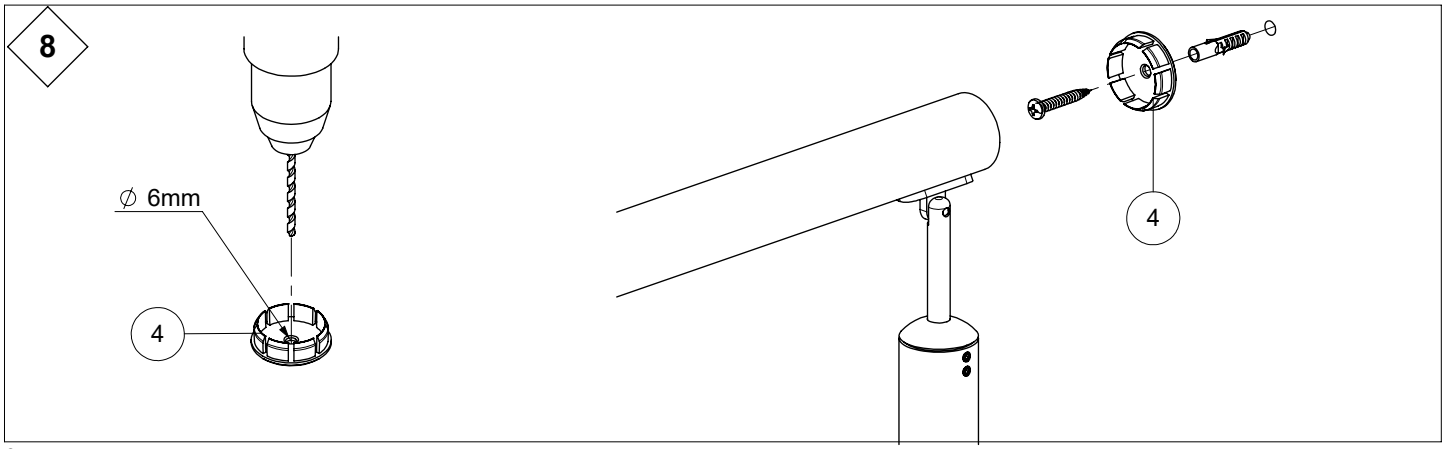
8
∅ 6mm
4
4

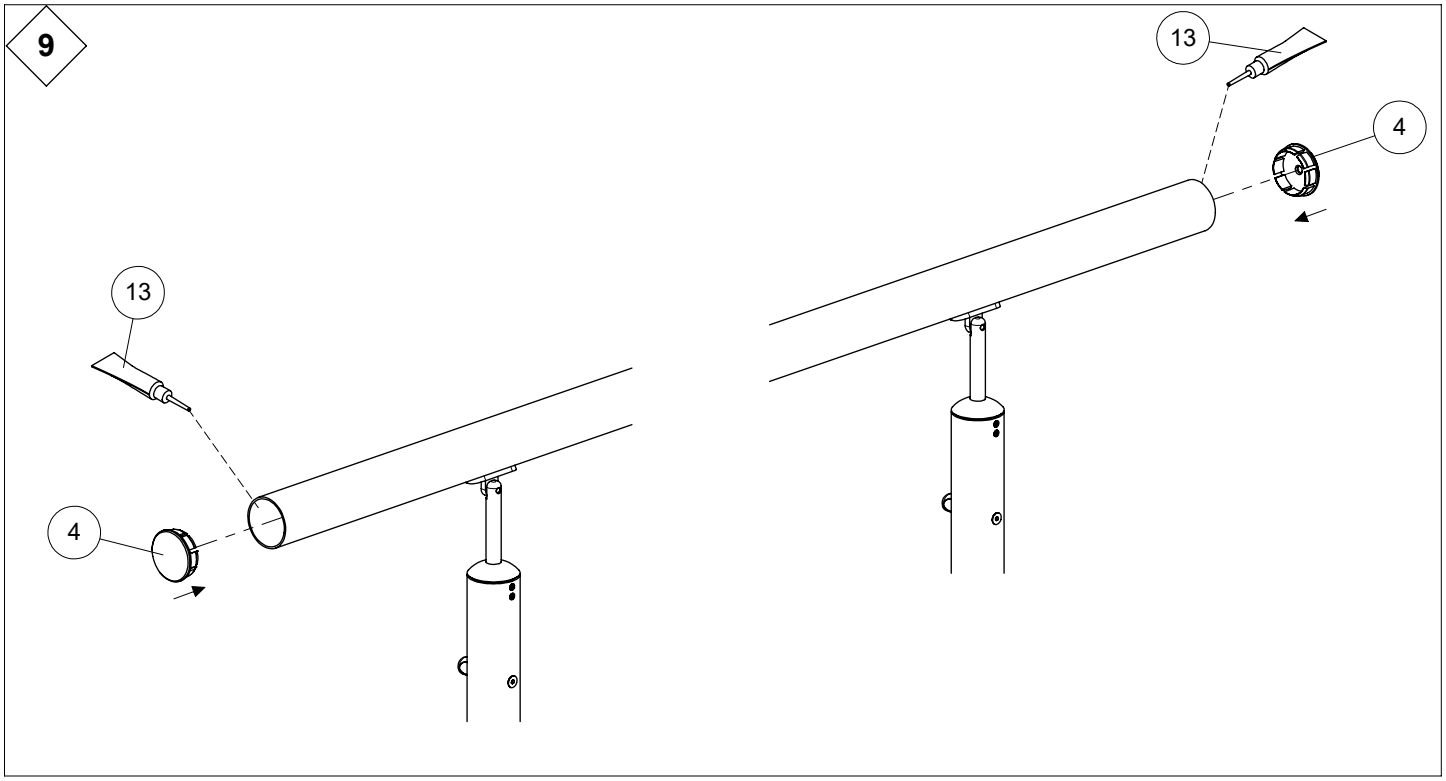
9
13
4
13
4

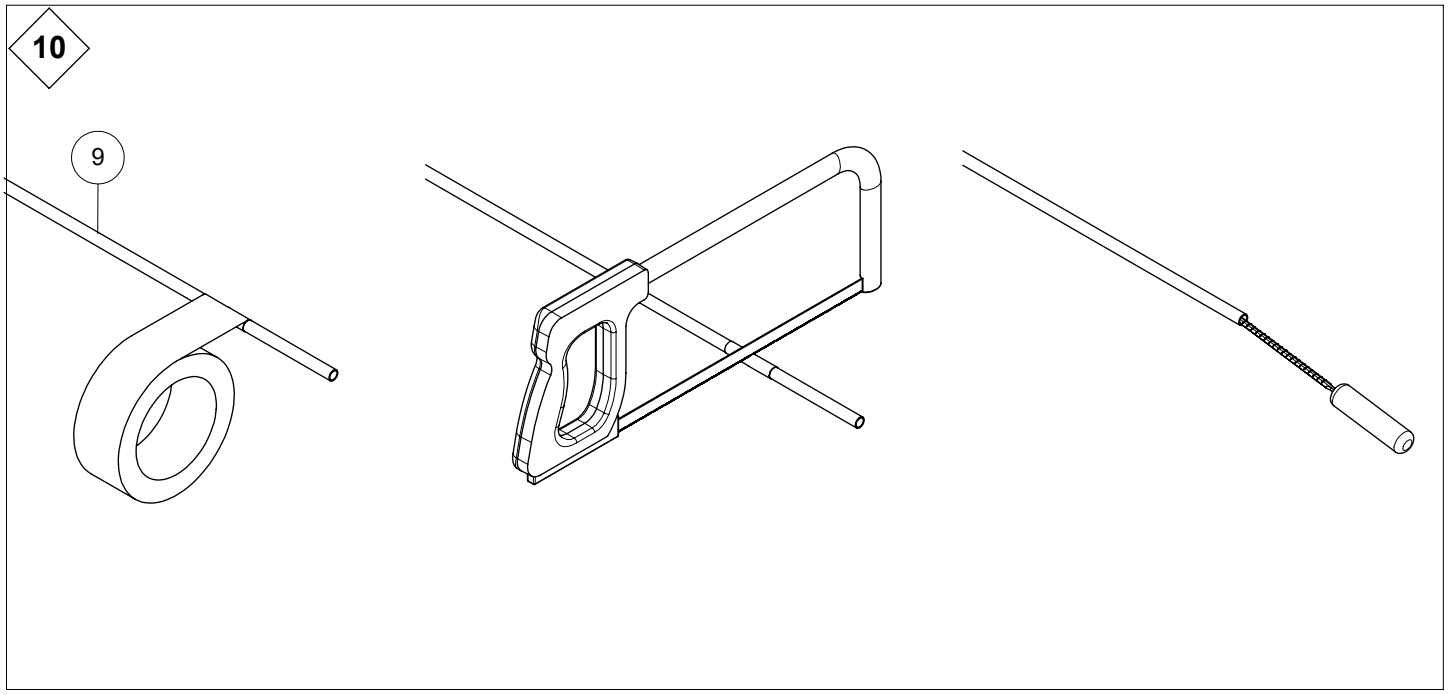
10
9

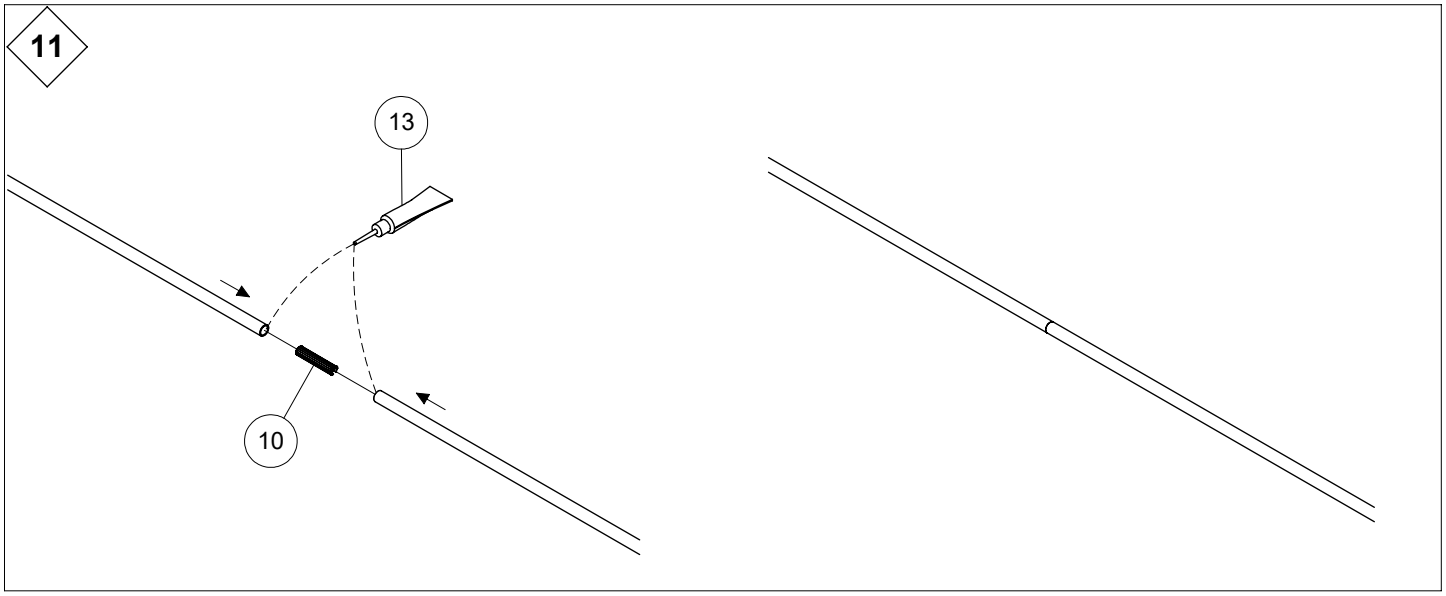
11
13
10

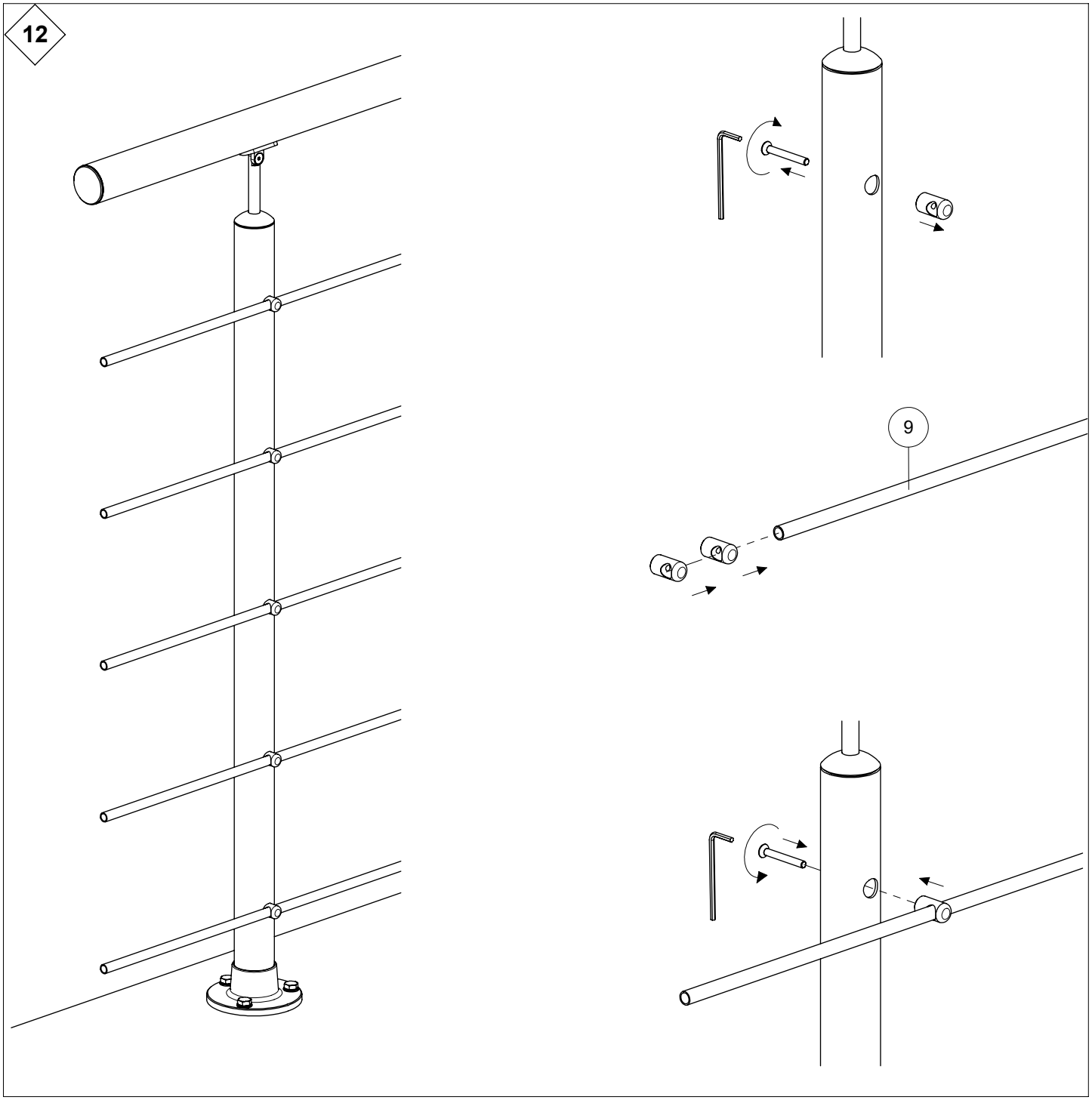
12
9

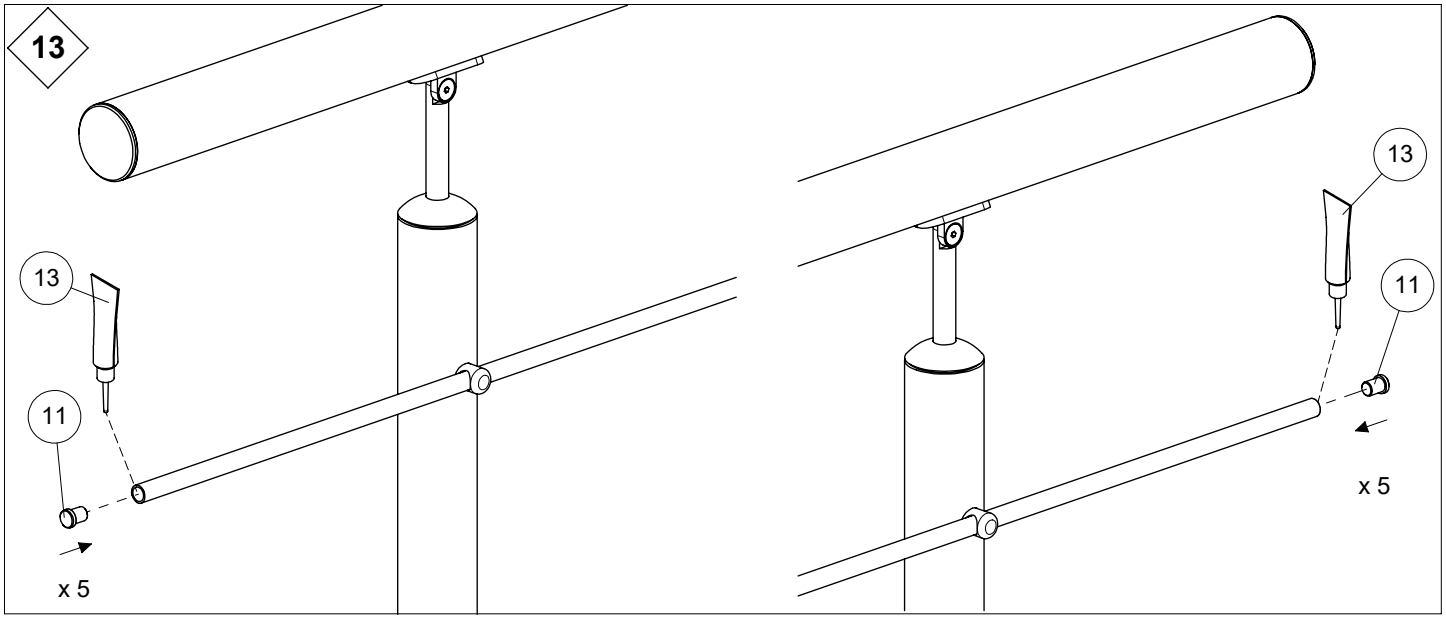
13
13
11
x 5
13
11
x 5

14 **HIC**

OPTION

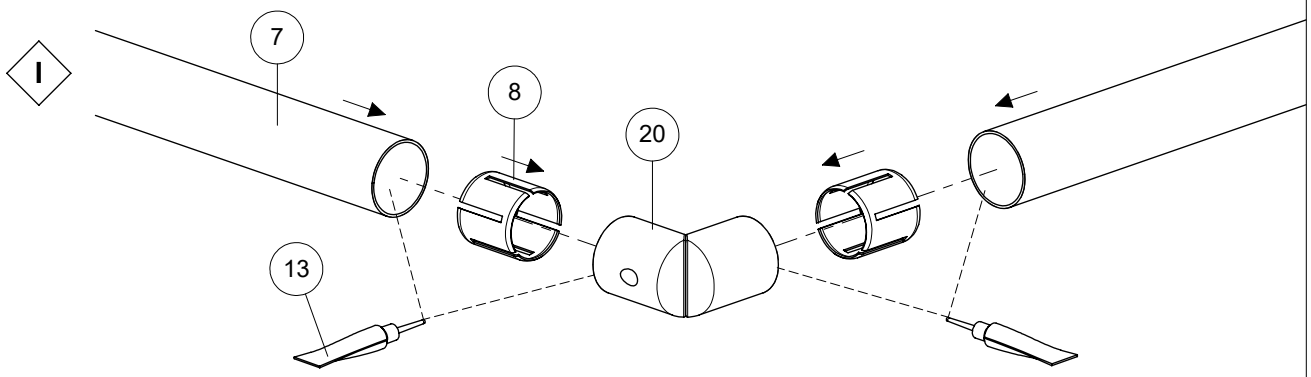

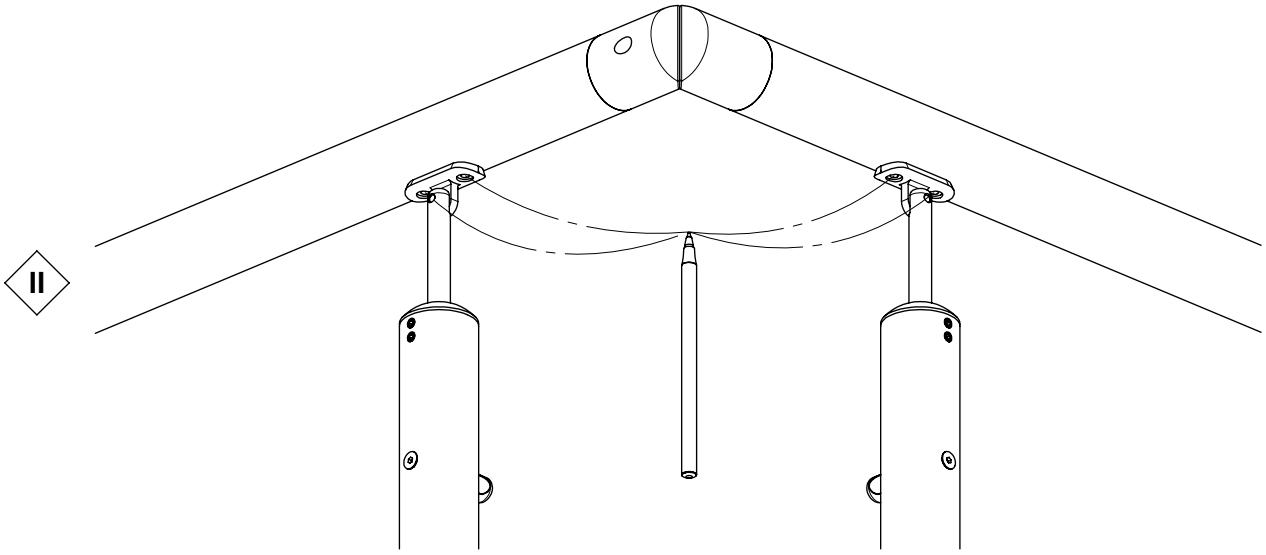

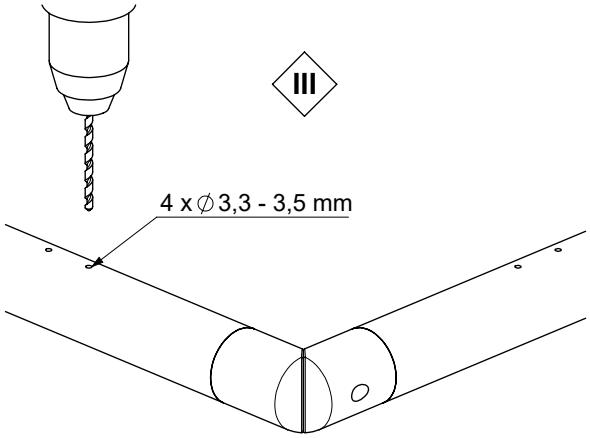

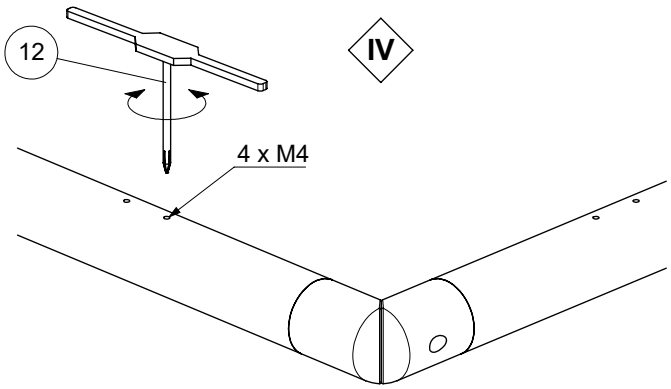

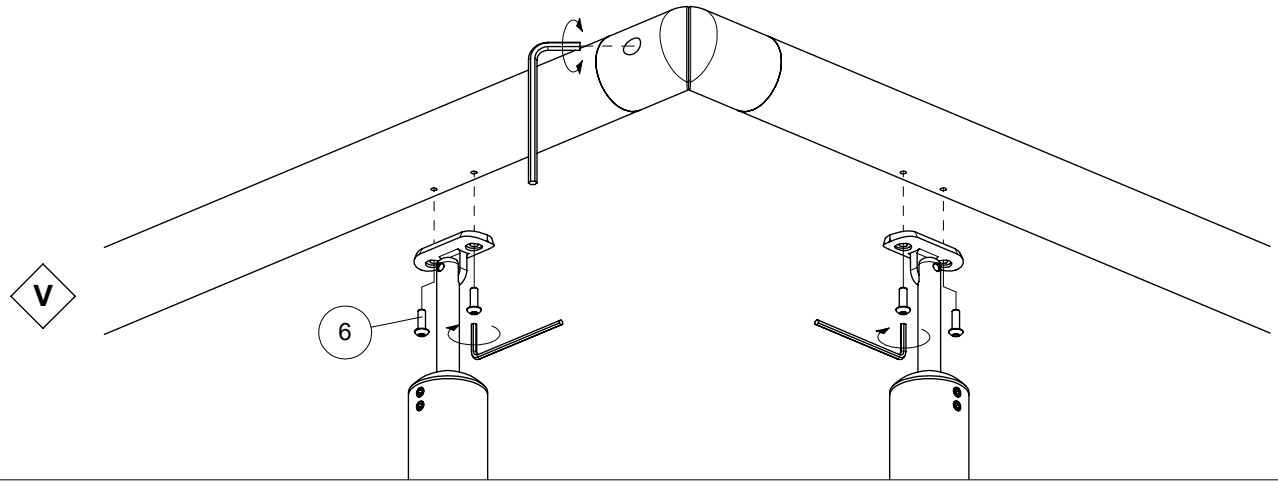

15

HIC

OPTION

I

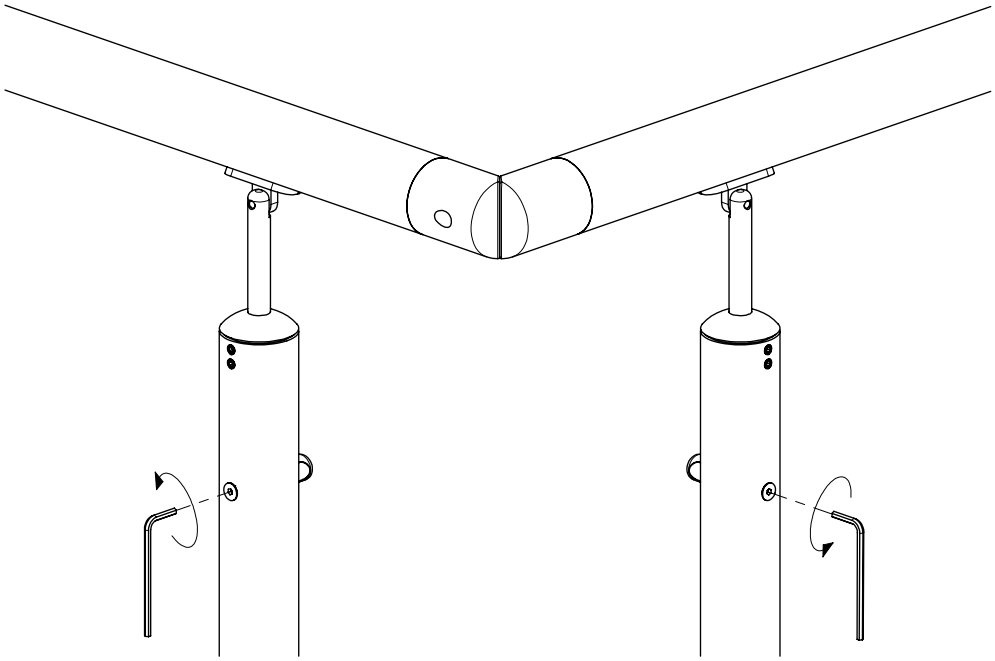

II

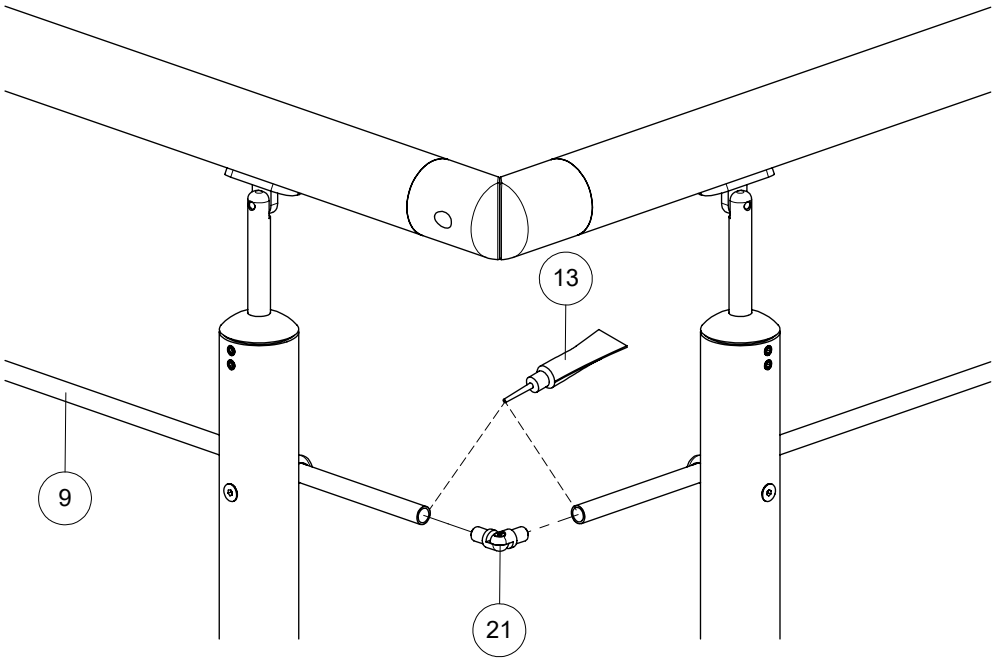

III

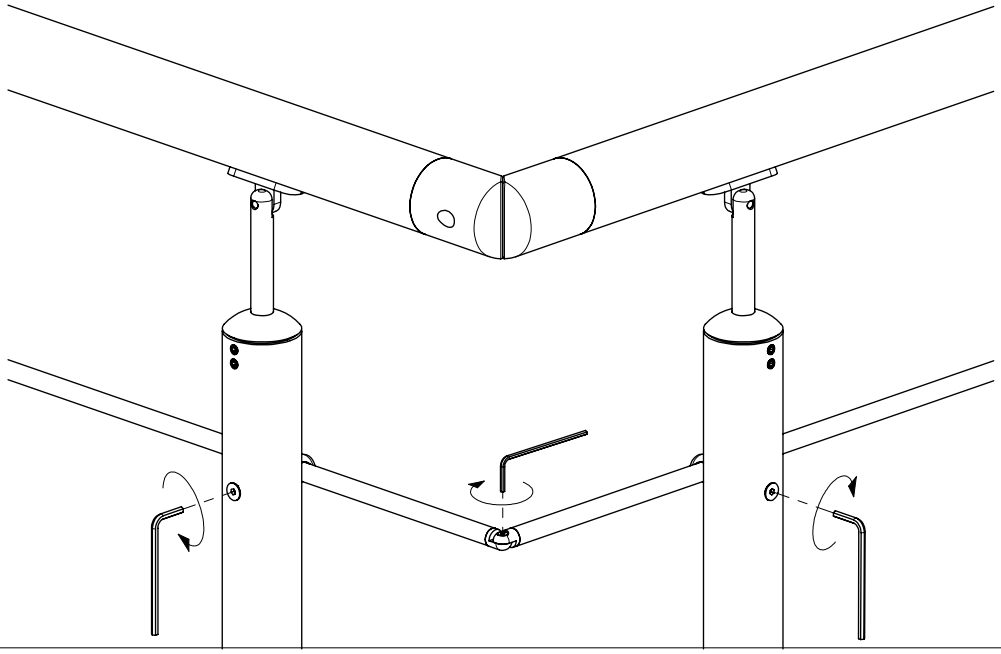

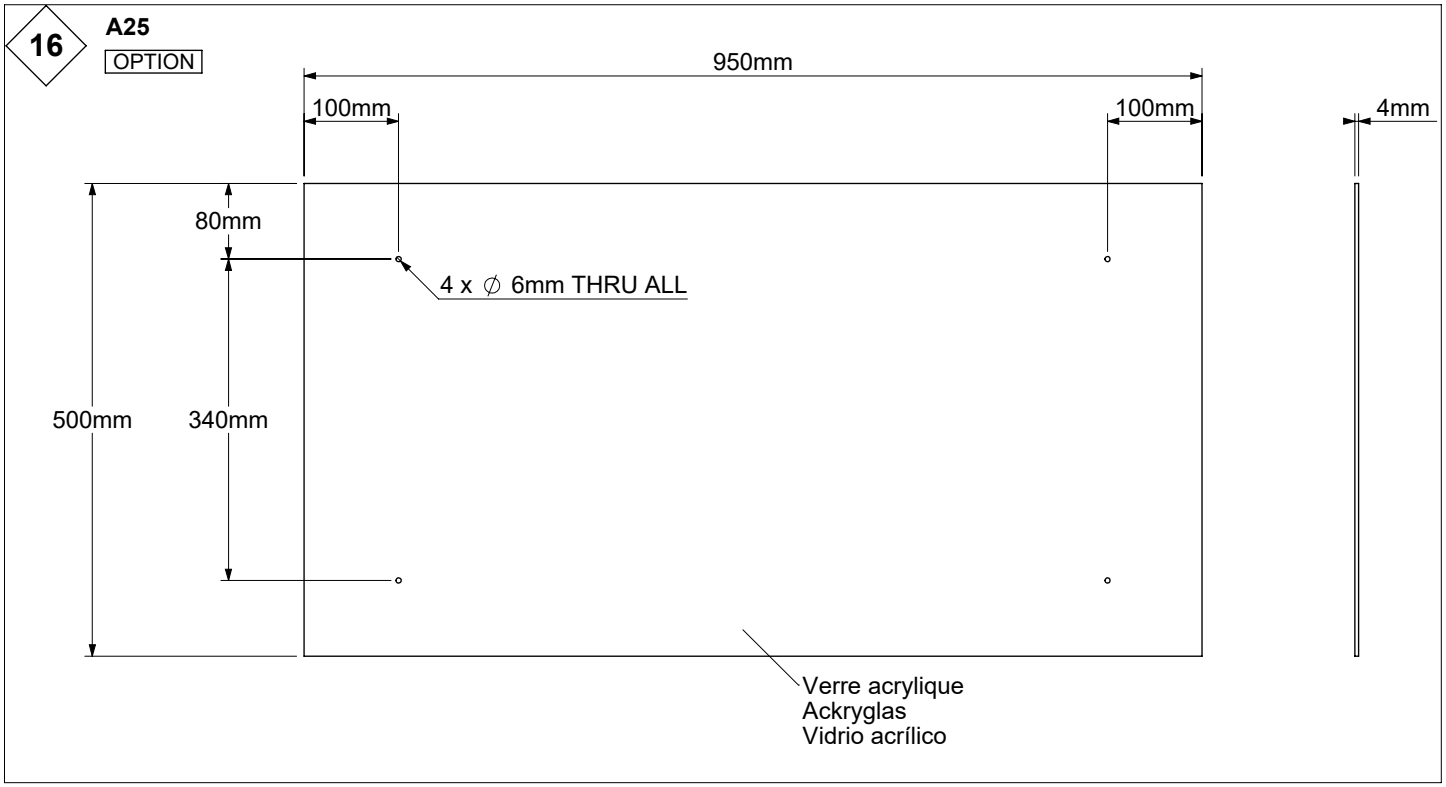
16
A25
OPTION
950mm
100mm
100mm
4mm
80mm
4 x ∅ 6mm THRU ALL
500mm
340mm
Verre acrylique
Ackryglas
Vidrio acrílico

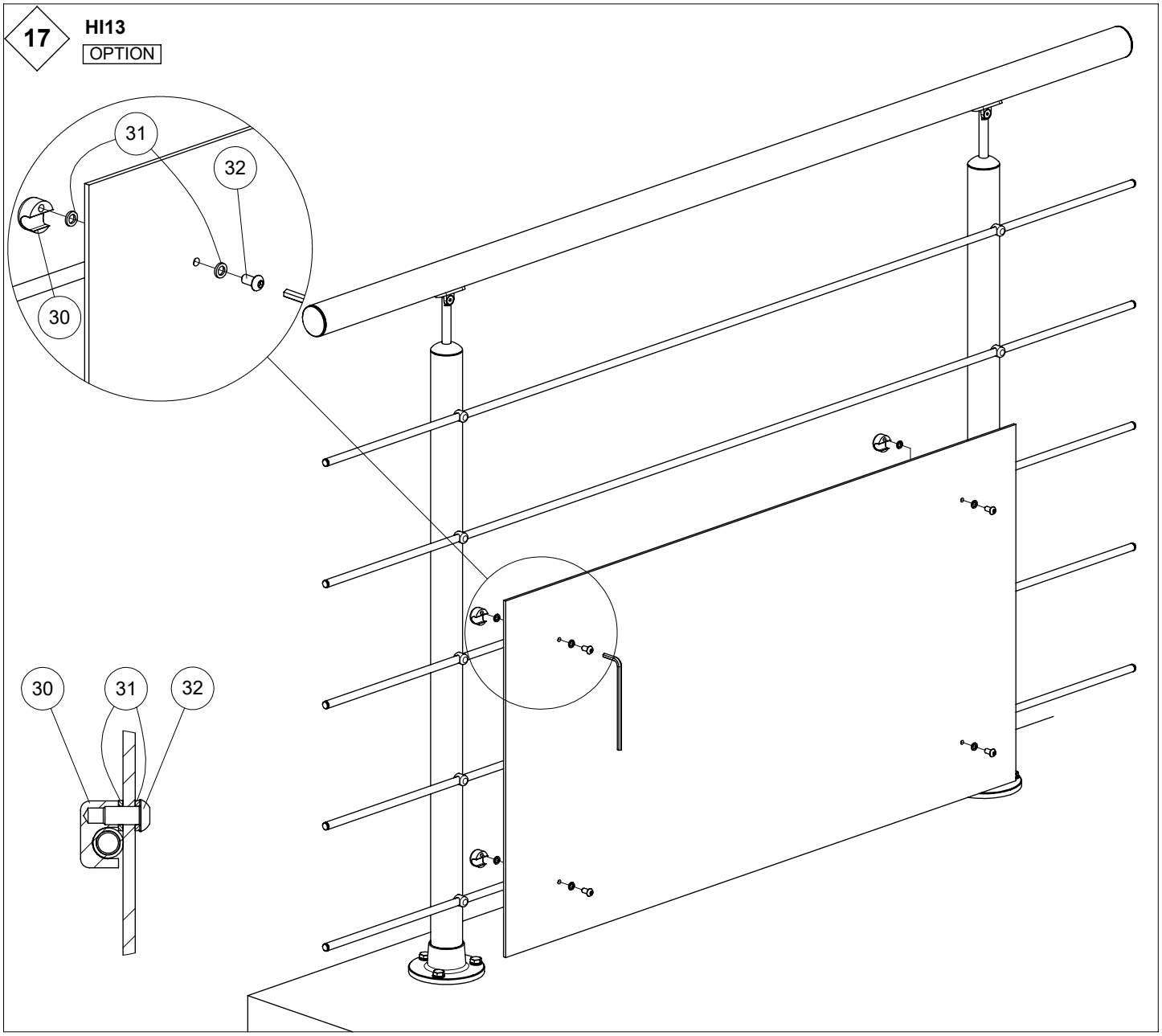
17
HI13
OPTION
31
32
30
30
31
32